ITX-i230D

Mini-ITX Industrial Motherboard

User's Manual

Version 1.0

2015.04

This page is intentionally left blank.

Revision History

Version	Release Time	Description
1.0	April, 2015	Initial release

This page is intentionally left blank.

Copyright Notice

The information in this document is subject to change without prior notice in order to improve the reliability, design and function. It does not represent a commitment on the part of the manufacturer.

Under no circumstances will the manufacturer be liable for any direct, indirect, special, incidental, or consequential damages arising from the use or inability to use the product or documentation, even if advised of the possibility of such damages.

Declaration of Conformity

CE

The CE symbol on your product indicates that it is in compliance with the directives of the Union European (EU). A Certificate of Compliance is available by contacting Technical Support.

This product has passed the CE test for environmental specifications when shielded cables are used for external wiring. We recommend the use of shielded cables. This kind of cable is available from ARBOR. Please contact your local supplier for ordering information.

This product has passed the CE test for environmental specifications. Test conditions for passing included the equipment being operated within an industrial enclosure. In order to protect the product from being damaged by ESD (Electrostatic Discharge) and EMI leakage, we strongly recommend the use of CE-compliant industrial enclosure products.

Warning

This is a class A product. In a domestic environment this product may cause radio interference in which case the user may be required to take adequate measures.

FCC Class A

This device complies with Part 15 of the FCC Rules. Operation is subject to the following two conditions:

(1) This device may not cause harmful interference, and

(2) This device must accept any interference received, including interference that may cause undesired operation.

NOTE:

This equipment has been tested and found to comply with the limits for a Class A digital device, pursuant to Part 15 of the FCC Rules. These limits are designed to provide reasonable protection against harmful interference when the equipment is operated in a commercial environment. This equipment generates, uses, and can radiate radio frequency energy and, if not installed and used in accordance with the instruction manual, may cause harmful interference to radio communications. Operation of this equipment in a residential area is likely to cause harmful interference in which case the user will be required to correct the interference at his own expense.

RoHS

ARBOR Technology Corp. certifies that all components in its products are in compliance and conform to the European Union's Restriction of Use of Hazardous Substances in Electrical and Electronic Equipment (RoHS) Directive 2002/95/EC.

The above mentioned directive was published on 2/13/2003. The main purpose of the directive is to prohibit the use of lead, mercury, cadmium, hexavalent chromium, polybrominated biphenyls (PBB), and polybrominated diphenyl ethers (PBDE) in electrical and electronic products. Member states of the EU are to enforce by 7/1/2006.

ARBOR Technology Corp. hereby states that the listed products do not contain unintentional additions of lead, mercury, hex chrome, PBB or PBDB that exceed a maximum concentration value of 0.1% by weight or for cadmium exceed 0.01% by weight, per homogenous material. Homogenous material is defined as a substance or mixture of substances with uniform composition (such as solders, resins, plating, etc.). Lead-free solder is used for all terminations (Sn(96-96.5%), Ag(3.0-3.5%) and Cu(0.5%)).

SVHC / REACH

To minimize the environmental impact and take more responsibility to the earth we live, Arbor hereby confirms all products comply with the restriction of SVHC (Substances of Very High Concern) in (EC) 1907/2006 (REACH --Registration, Evaluation, Authorization, and Restriction of Chemicals) regulated by the European Union.

All substances listed in SVHC < 0.1 % by weight (1000 ppm)

Warning

Single Board Computers and their components contain very delicate Integrated Circuits (IC). To protect the Single Board Computer and its components against damage from static electricity, you should always follow the following precautions when handling it :

1. Disconnect your Single Board Computer from the power source when you want to work on the inside.
2. Hold the board by the edges and try not to touch the IC chips, leads or circuitry.
3. Use a grounded wrist strap when handling computer components.
4. Place components on a grounded antistatic pad or on the bag that comes with the Single Board Computer, whenever components are separated from the system.

Replacing Lithium Battery

Incorrect replacement of the lithium battery may lead to a risk of explosion.

The lithium battery must be replaced with an identical battery or a battery type recommended by the manufacturer.

Do not throw lithium batteries into the trash-can. It must be disposed of in accordance with local regulations concerning special waste.

Technical Support

If you have any technical difficulties, please do not hesitate to call or e-mail our customer service.

http://www.arbor.com.tw

E-mail:info@arbor.com.tw

Warranty

This product is warranted to be in good working order for a period of two years from the date of purchase. Should this product fail to be in good working order at any time during this period, we will, at our option, replace or repair it at no additional charge except as set forth in the following terms. This warranty does not apply to products damaged by misuse, modifications, accident or disaster.

Vendor assumes no liability for any damages, lost profits, lost savings or any other incidental or consequential damage resulting from the use, misuse of, or inability to use this product. Vendor will not be liable for any claim made by any other related party.

Vendors disclaim all other warranties, either expressed or implied, including but not limited to implied warranties of merchantability and fitness for a particular purpose, with respect to the hardware, the accompanying product's manual(s) and written materials, and any accompanying hardware. This limited warranty gives you specific legal rights.

Return authorization must be obtained from the vendor before returned merchandise will be accepted. Authorization can be obtained by calling or faxing the vendor and requesting a Return Merchandise Authorization (RMA) number. Returned goods should always be accompanied by a clear problem description.

Chapter 1

Introduction

1.1. Product Highlights

- Low Profile Design
- Soldered onboard Intel® Celeron® Processor J1900
- Integrated Gigabit Ethernet Port
- Dual Channel 24-bit LVDS, HDMI_OUT and HDMI_IN
- Dual Independent Displays supported

1.2. About this Manual

This manual is intended for experienced users and integrators with hardware knowledge of computers. If you are not sure about the description in this manual, consult your vendor before further handling.

We recommend that you keep one copy of this manual for the quick reference for any necessary maintenance in the future. Thank you for choosing ARBOR products.

1.3. Specifications

Form Factor	Mini-ITX industrial motherboard
CPU	Soldered onboard Intel® Celeron Processor J1900 2.0GHz
System Memory	1 x DDR3L SO-DIMM socket, supporting up to 8GB 1333MT/s SDRAM
Graphic Chipset	Integrated Intel® Gen 7 Graphics
Graphic Interface	1 x HDMI_OUT port 1 x HDMI_IN port LCD: Dual-Channels 24-bit LVDS
Serial Port	1 x RS-232 port (Optional)
Expansion Bus	1 x Mini-card socket (Half-size)
Ethernet	1 x Realtek RTL8111G Gigabit Ethernet controllers
BIOS	AMI 64Mb SPI Flash BIOS
Audio	Realtek ALC662 + ALC113, Mic-in/Line-out
Serial ATA	2 x Serial ATA ports with 300MB/s HDD transfer rate
USB	7 x USB 2.0 ports 2 x USB 3.0/2.0 ports
Power Requirement	19V DC Jack
Operation Temp.	0 ~ 60°C (32 ~ 140°F) w/ cooling fan
Operating Humidity	10 ~ 60% @ 60°C (non-condensing)
Dimension (L xW)	170 x 170 mm (6.7” x 6.7”)

1.4. Inside the Package

Before starting to install the single board, make sure the following items are shipped:

	1 x ITX-i230D Industrial Motherboard
	1 x Driver CD
	1 x Quick Installation Guide
	1 x I/O bracket
	1 x DC 2.5 Jack to 7.4 Plug Cable

If any of the aforelisted items is damaged or missing, contact your vendor immediately.

1.5. Ordering Information

ITX-i230D	Intel® Celeron® Processor J1900 Embedded Mini-ITX motherboard
CBK-07-230D-00	Cable kit 1 x Two Ports USB cable 3 x One Port USB cables 1 x Two Ports SATA Power cable 2 x SATA cables

1.6. RAM Installation

The main board has one memory module (SO-DIMM) sockets. Load the computer with a memory module of higher capacity to make programs run faster. The memory module for the computer's SO-DIMM socket should be a DDR3L with a "key notch" off the centre among the pins, which enables the memory module for particular applications. There are another two notches at each left and right side of the memory module to help fix the module in the socket.

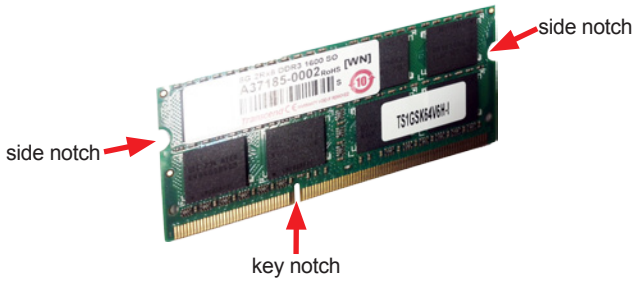

To install the memory module:

1. Find the SO-DIMM socket on the board as marked in the illustration below. The SO-DIMM socket is horizontal type, and it has two spring-loaded locks to fix the memory module.

2. Confront the memory module's edge connector with the SO-DIMM slot connector. Align the memory module's key notch at the break on the SO-DIMM slot connector.

3. Fully plug the memory module until it gets auto-locked in place.

To uninstall the memory module:

1. Pull back the locks from both sides of the SO-DIMM socket.
   The memory module will be auto-released from the socket.
2. Remove the memory module.

This page is intentionally left blank.

Chapter 2

Getting Started

2.1. Board Dimensions

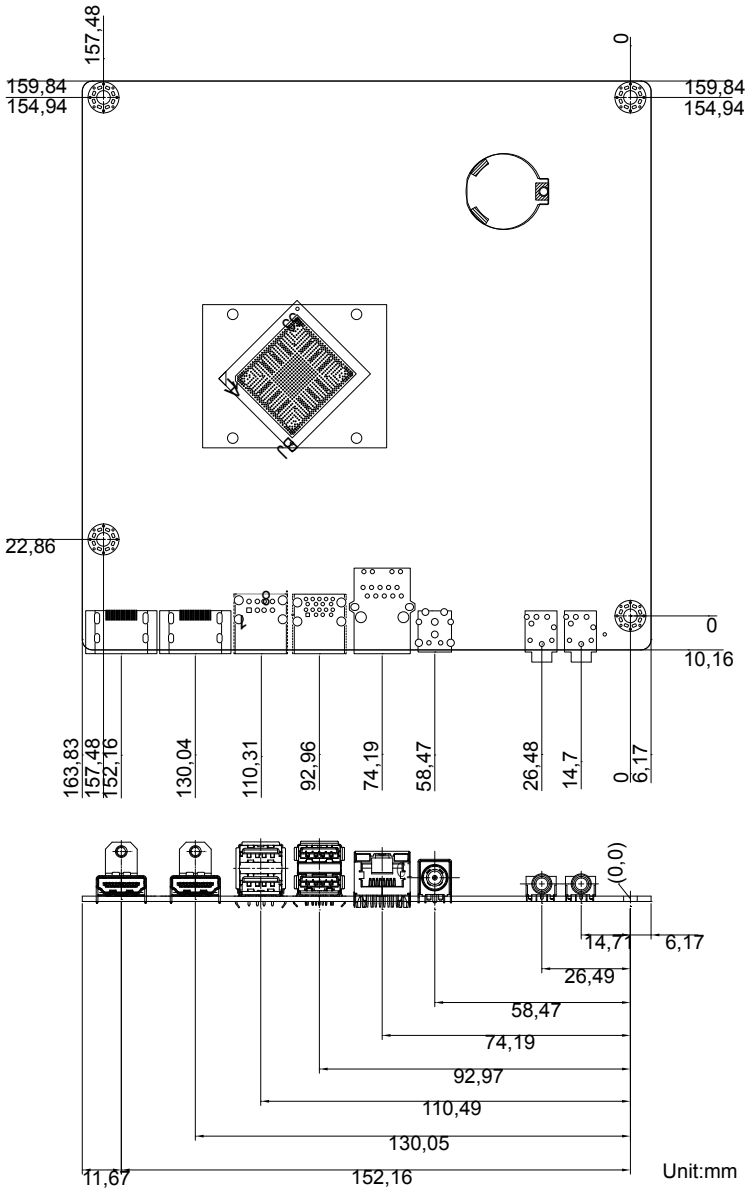

2.2. Block Diagram

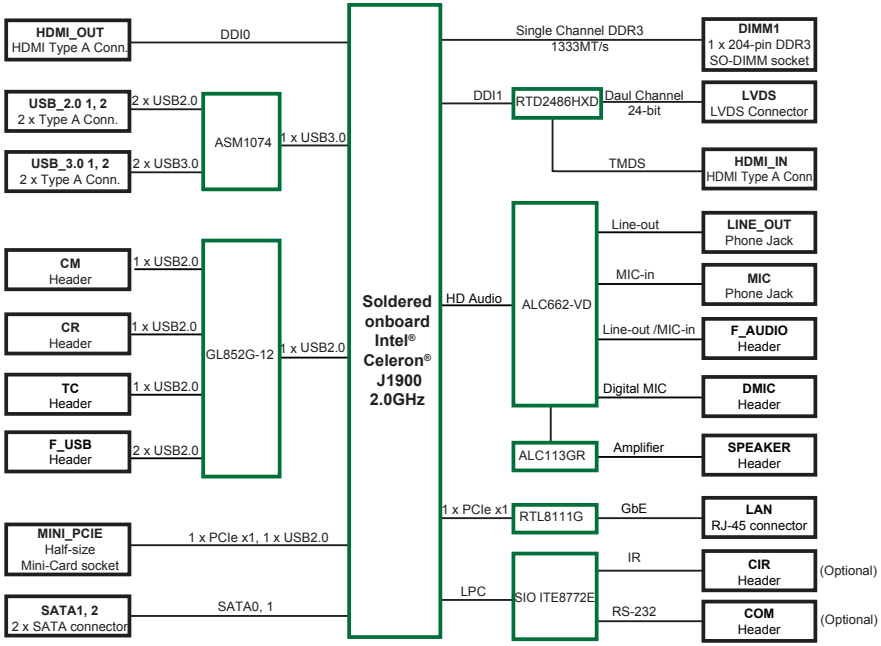

2.3. Jumpers & Connectors

The board comes with some connectors to join some devices and also some jumpers to alter the hardware configuration. The following in this chapter will explicate each of these components one-by-one.

2.3.1. Layout

This section will provide an overview of this board.

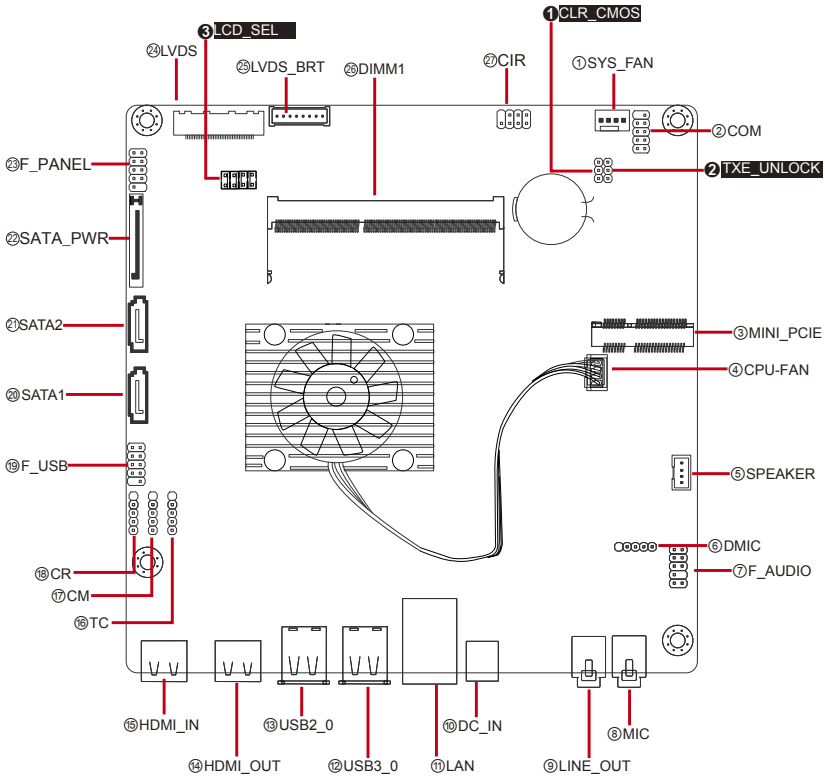

2.3.2. Jumpers

CLR_CMOS

Function: Clears/keeps CMOS

Jumper Type: 2.54mm pitch 1x3-pin header

Setting:

Pin	Description	
1-2	Keeps CMOS (default)	
2-3	Clears CMOS	

Board Top

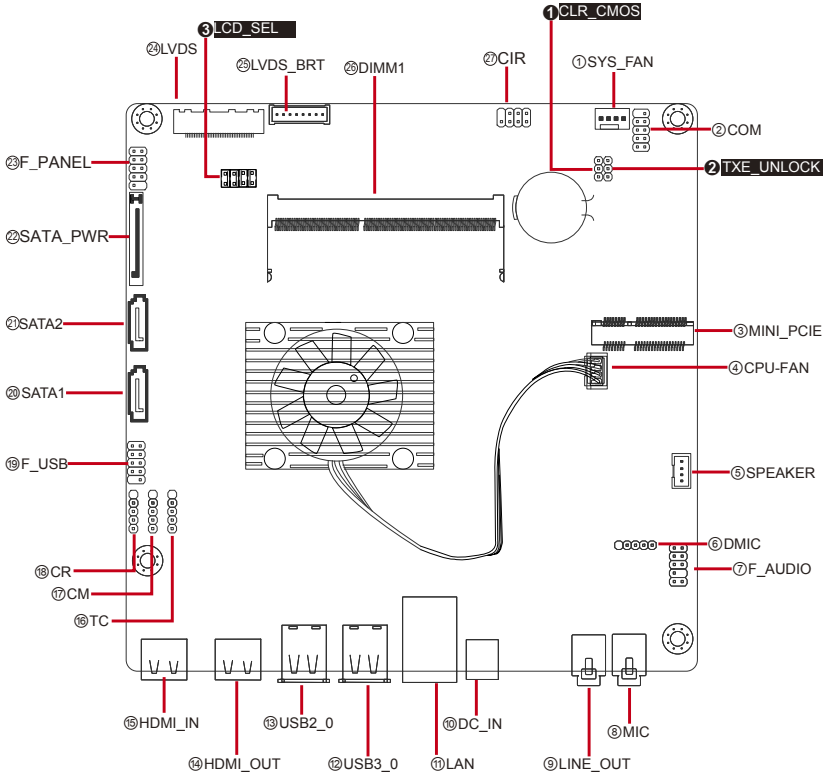

TXE_UNLOCK

Function: TXE Unlock (Optional)

Jumper Type: 2.54mm pitch 1x3-pin header

Setting:

Pin	Description	
1-2	Normal (Default)	
2-3	Override	

Board Top

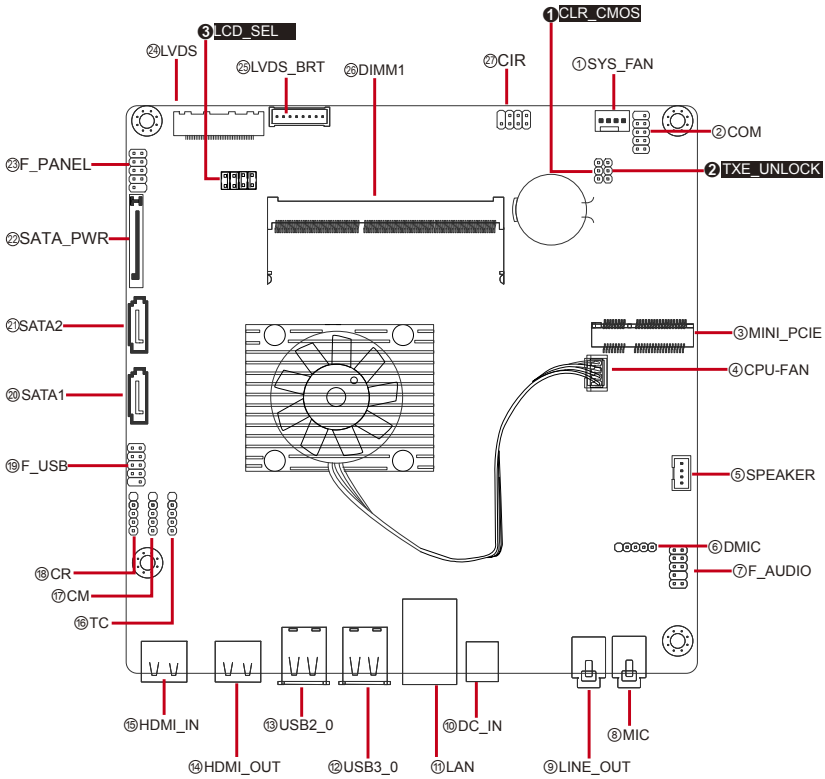

LCD_SEL

Function: LCD Resolution Selection

Jumper Type: 2.54mm pitch 2x4-pin headers

Setting:

Pin	Description	
1-2 5-6	1600 x 900	
1-2 3-4	1920 x 1080 (Default)	

Board Top

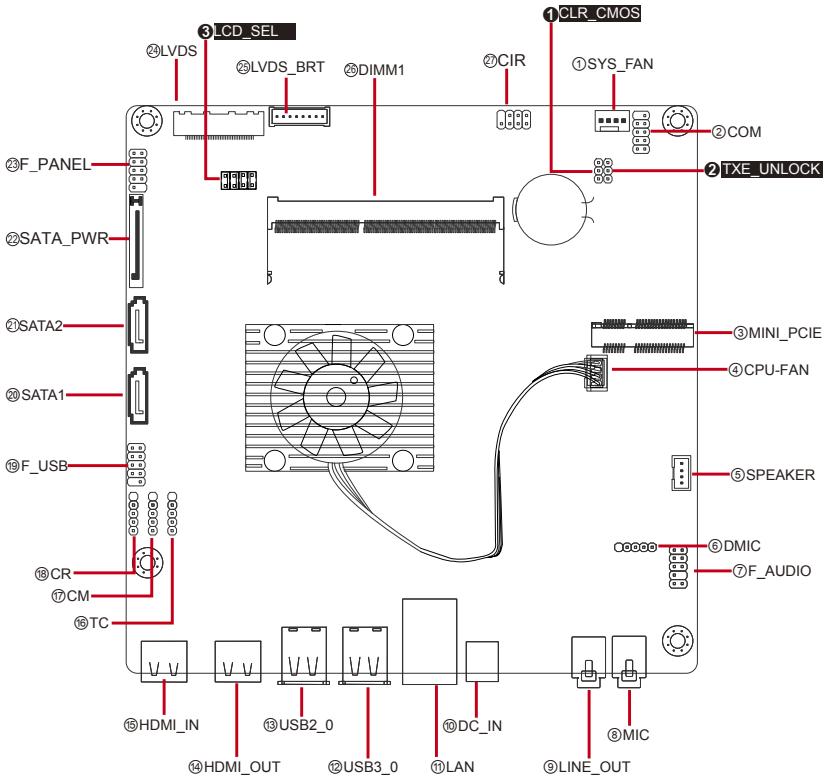

2.3.3. Connectors

SYS_FAN

Function: Fan power connector

Connector Type: Onboard 1 x 4-pin one-wall wafer connector

Pin Assignment:

Pin	Description
1	GND
2	+12V
3	FAN_Detect
4	CTRL

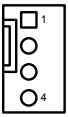

Note: The fan must be a 12V fan.

Board Top

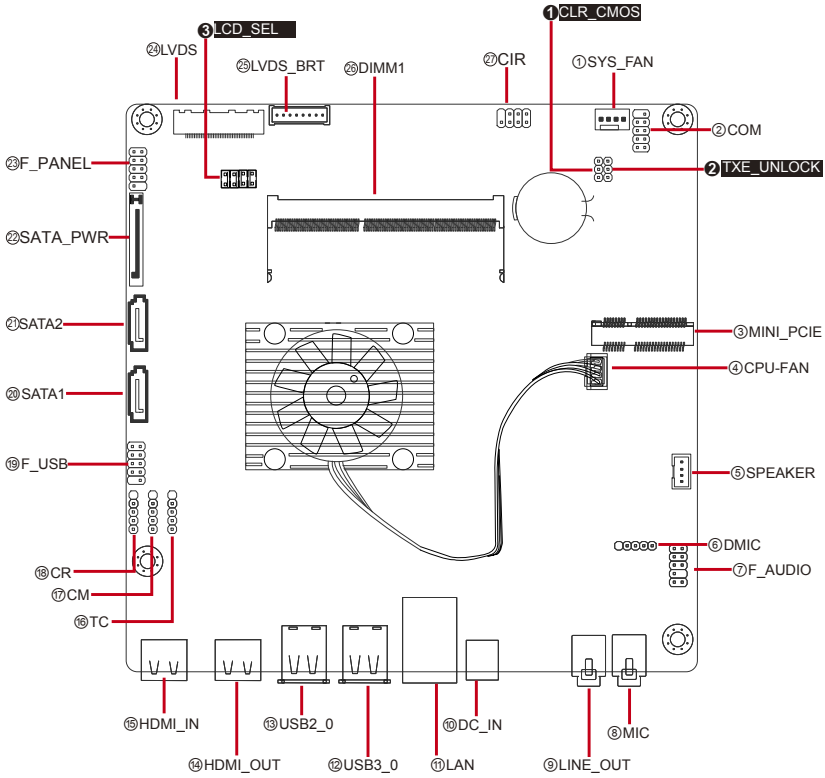

COM

Function: Onboard serial port header (Optional)

Connector Type: 2.54mm pitch 2x5-pin headers

Pin Assignment:

Pin	Desc.	Pin	Desc.
1	DCD	2	SIN
3	SOUT	4	DTR
5	GND	6	DSR
7	RTS	8	CTS
9	RI	10	N/C

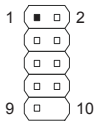

Board Top

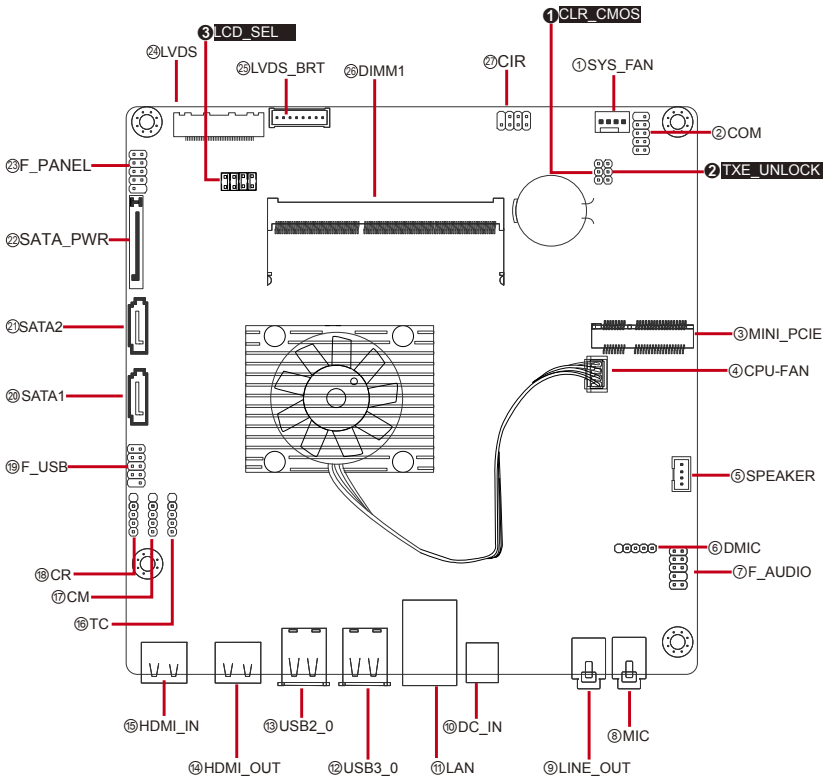

MINI_PCIE

Function: Mini PCI Express x1 slot (Half-size Card Only)

Connector Type: Onboard 0.8mm-pitch 52-pin edge card connector

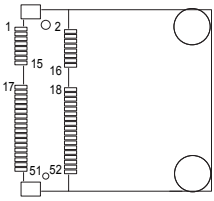

Pin Assignment:

Pin	Desc.	Pin	Desc.	Pin	Desc.	Pin	Desc.
1	WAKE#	16	N/C				
2	+3.3V	17	N/C				
3	N/C	18	GND				
4	GND	19	N/C				
5	N/C	20	W_DISABLE#	31	PE_CAD3_TX-	42	N/C
6	+1.5V	21	GND	32	SMB_DATA	43	GND
7	CLKREQ#	22	PCIE_ARST#	33	PE_CAD3_TX+	44	N/C
8	N/C	23	PE_CAD3_RX-	34	GND	45	N/C
9	GND	24	+3.3V	35	GND	46	N/C
10	UIM_DATA_A	25	PE_CAD3_RX+	36	N/C	47	N/C
11	REFCLK-	26	GND	37	GND	48	+1.5V
12	N/C	27	GND	38	N/C	49	N/C
13	REFCLK+	28	+1.5V	39	+3.3V	50	N/C
14	N/C	29	GND	40	GND	51	N/C
15	GND	30	SMB_CLK	41	+3.3V	52	+3.3V

Board Top

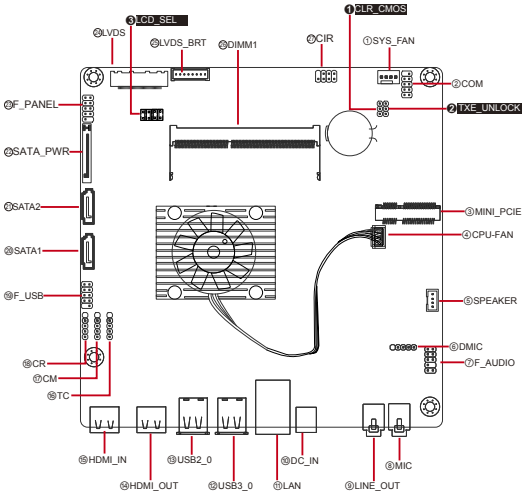

CPU_FAN

Function: CPU Cooling FAN Connector

Connector Type: Onboard 1 x 4-pin one-wall wafer connector

Pin Assignment:

Pin	Description
1	GND
2	+12V
3	FAN_Detect
4	CTRL

Note: The fan must be a 12V fan.

Board Top

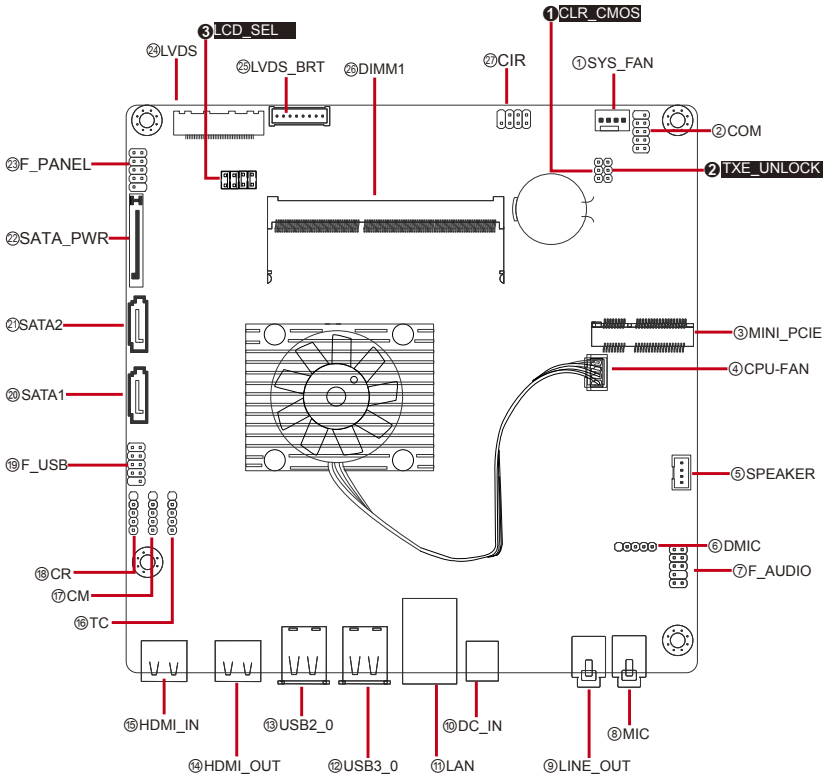

SPEAKER

Function: Internal Speaker Header

Connector Type: 2.00mm pitch 1x4-pin headers

Pin Assignment:

Pin	Desc.
1	L_Channel-
2	L_Channel+
3	R_Channel+
4	R_Channel-

Board Top

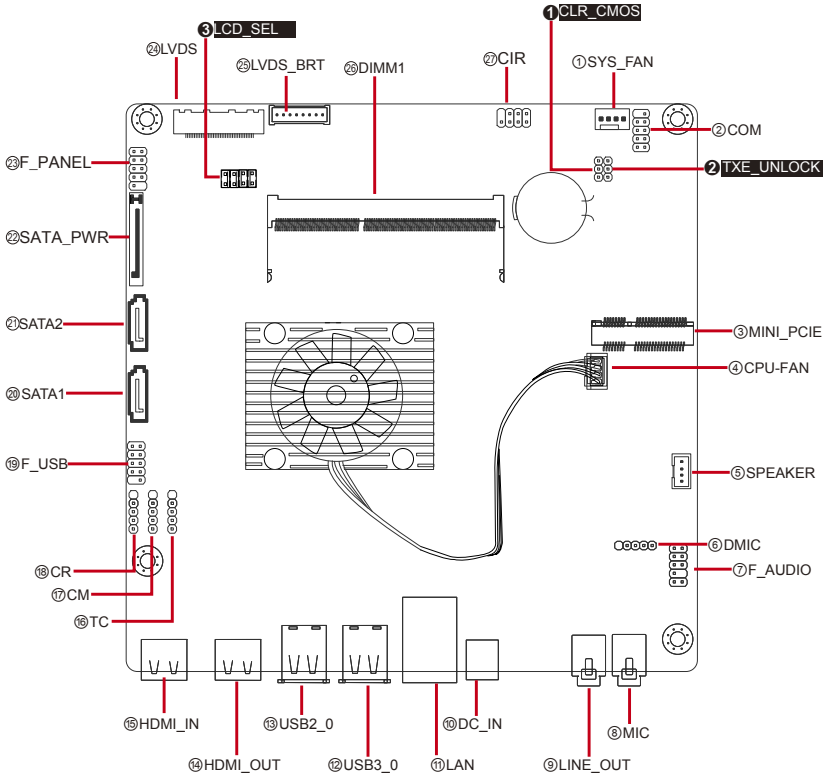

DMIC

Function: Digital MIC Header

Connector Type: 2.54mm pitch 1x5-pin headers

Pin Assignment:

Pin	Desc.
1	+3.3V
2	DMIC DATA
3	GND
4	DMIC Clock
5	N/C

Board Top

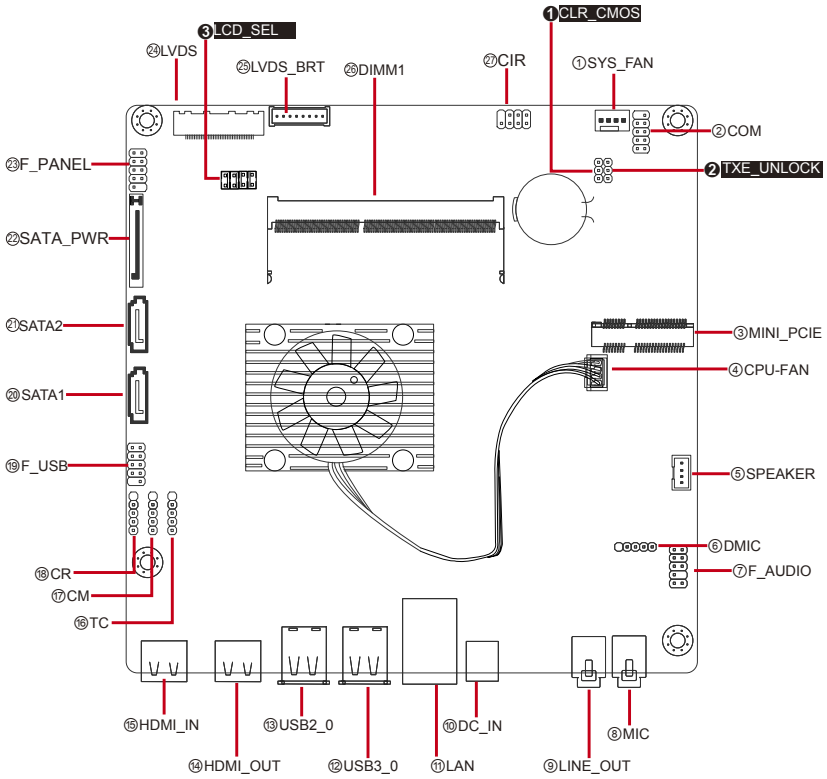

F_AUDIO

Function: Front Panel Audio Header

Connector Type: 2.54mm pitch 2x5-pin headers

Pin Assignment:

Pin	Desc.	Pin	Desc.
1	FP_MIC_in	2	Analog_GND
3	MIC_Power	4	Presence#
5	FP_Right	6	Sense1_Return
7	Sense_Send	8	N/C
9	FP_Left	10	Sense2_Return

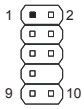

Board Top

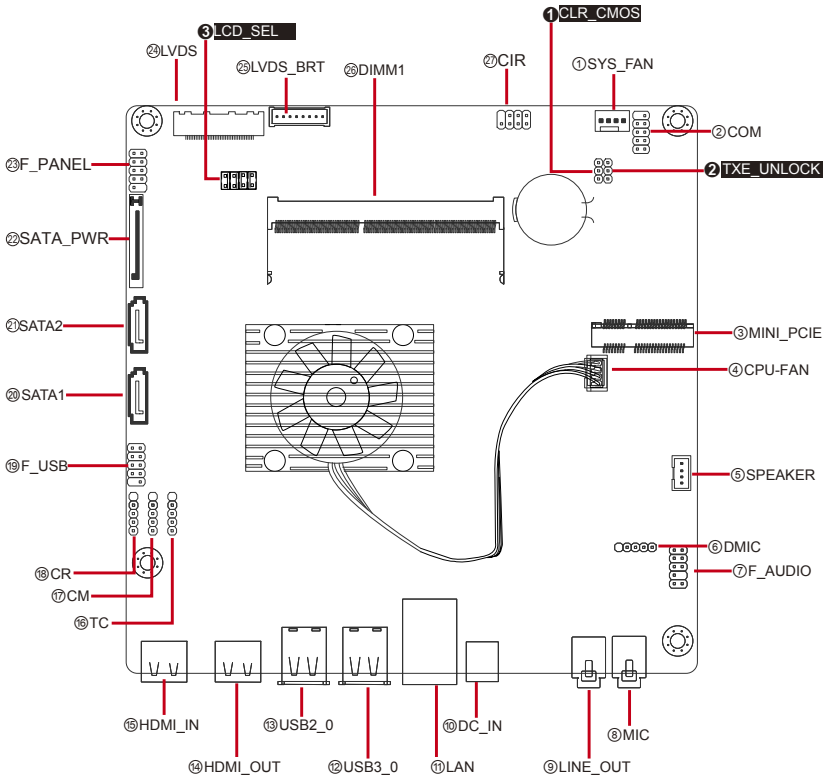

MIC&LINE_OUT

Function: Microphone&Line-out

Connector Type: ø3.5mm stereo audio jacks

Pin Assignment:

The pin assignments conform to the industry standard.

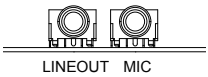

Board Top

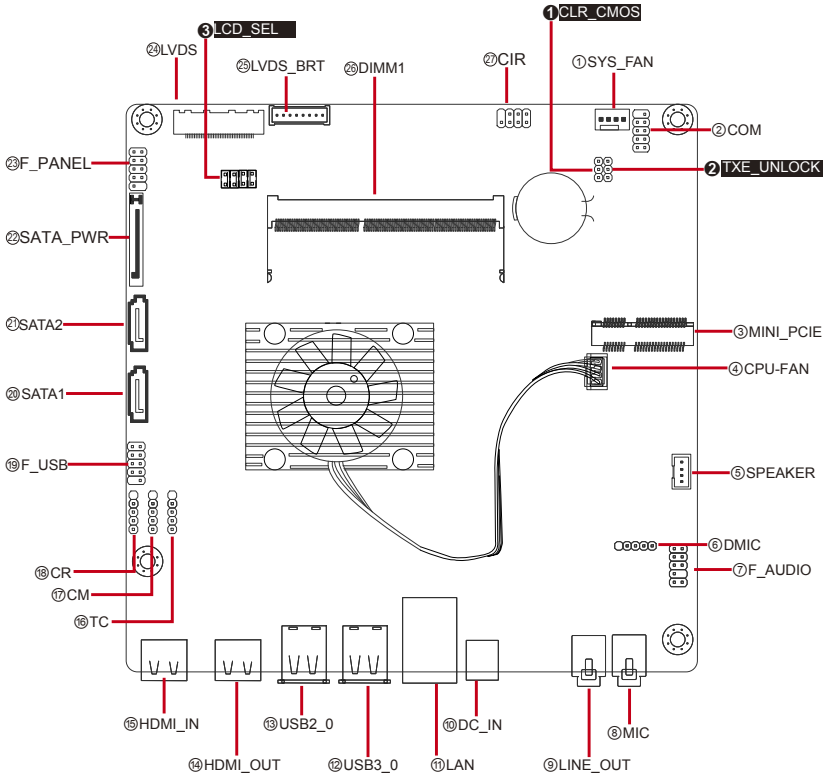

DC_IN

Function: DC jack

Connector Type: DC Φ7.4 Male connector

Pin Assignment:

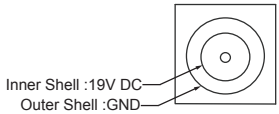

Board Top

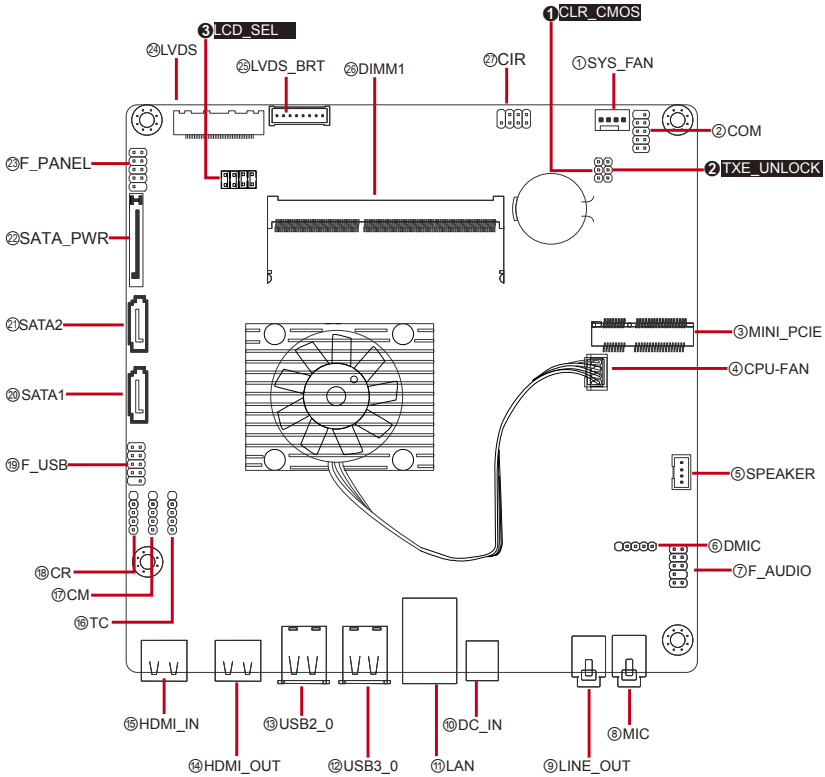

LAN

Function: Ethernet Connector

Connector Type: RJ-45 LAN port with LED lamps

Pin Assignment:

LAN (RJ-45)	
LED	**Definition**
Active	OFF:No DATA Orange blinck: Active
Link	Green: Linked Off: No Link

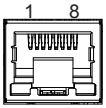

Board Top

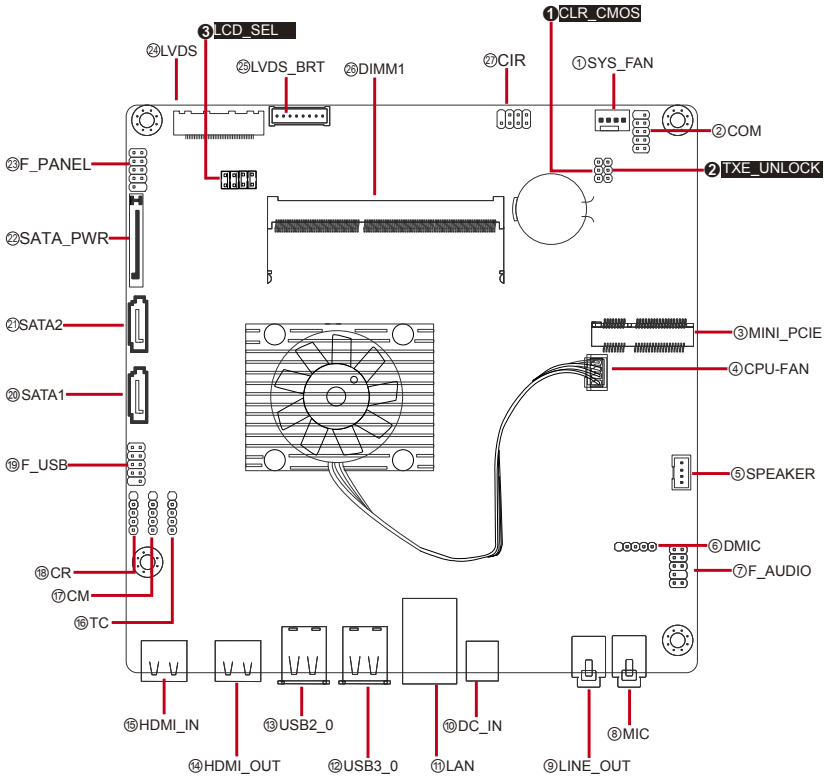

USB3_0

Function: USB 3.0 Connector

Connector Type: USB 3.0 Type A connector

Pin Assignment:

The pin assignments conform to the industry standard.

Board Top

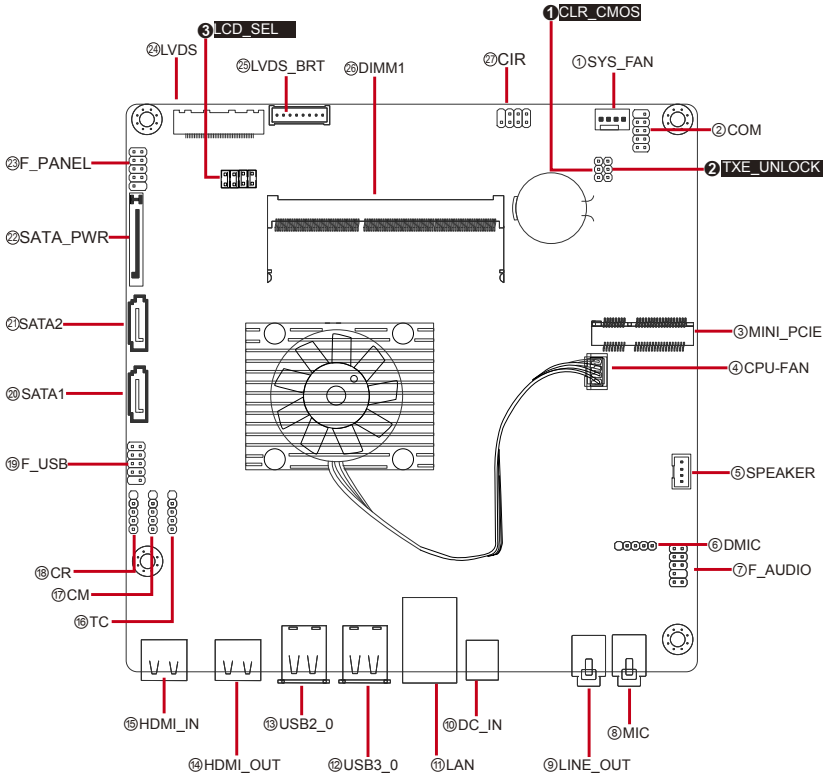

USB2_0

Function: USB 2.0 Connector

Connector Type: USB 2.0 Type A connector

Pin Assignment:

The pin assignments conform to the industry standard.

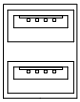

Board Top

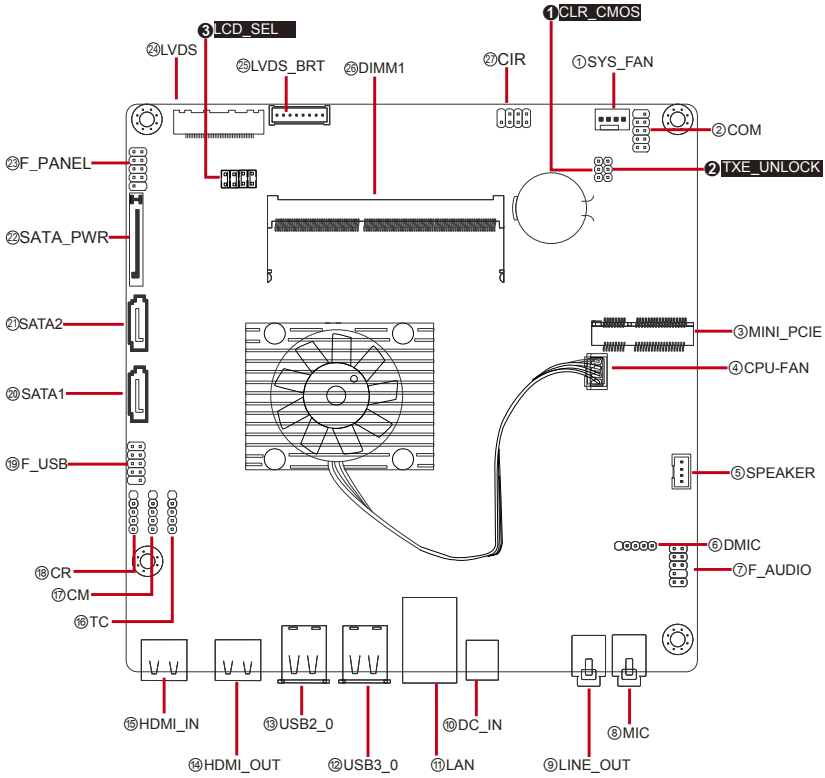

HDMI_OUT

Function: HDMI Output Connector

Connector Type: HDMI-OUT connector

Pin Assignment:

The pin assignments conform to the industry standard.

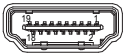

Board Top

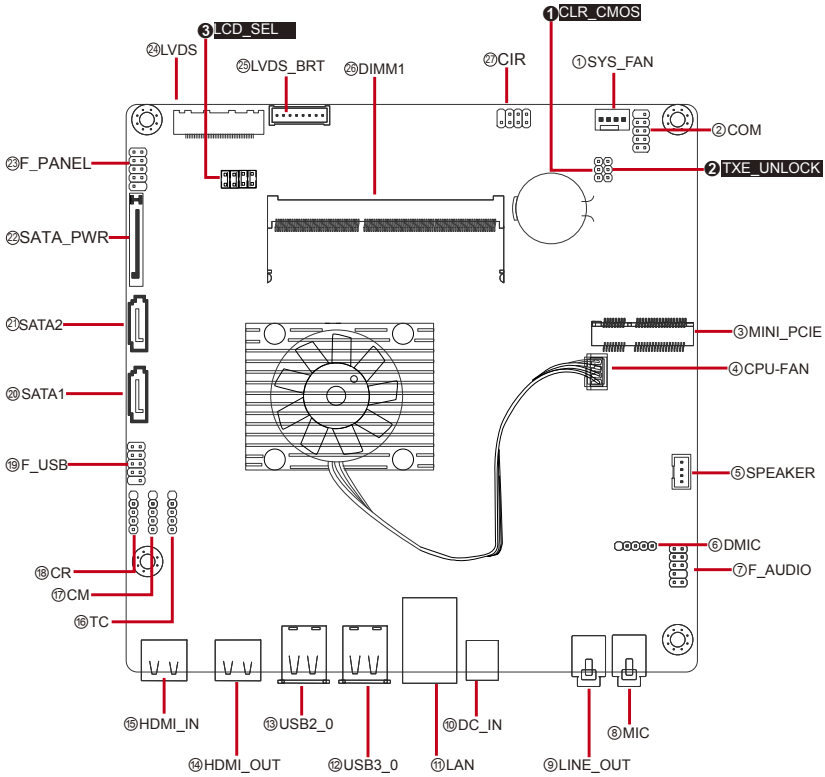

HDMI_IN

Function: HDMI Input Connector

Connector Type: HDMI-IN connector

Pin Assignment:

The pin assignments conform to the industry standard.

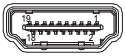

Board Top

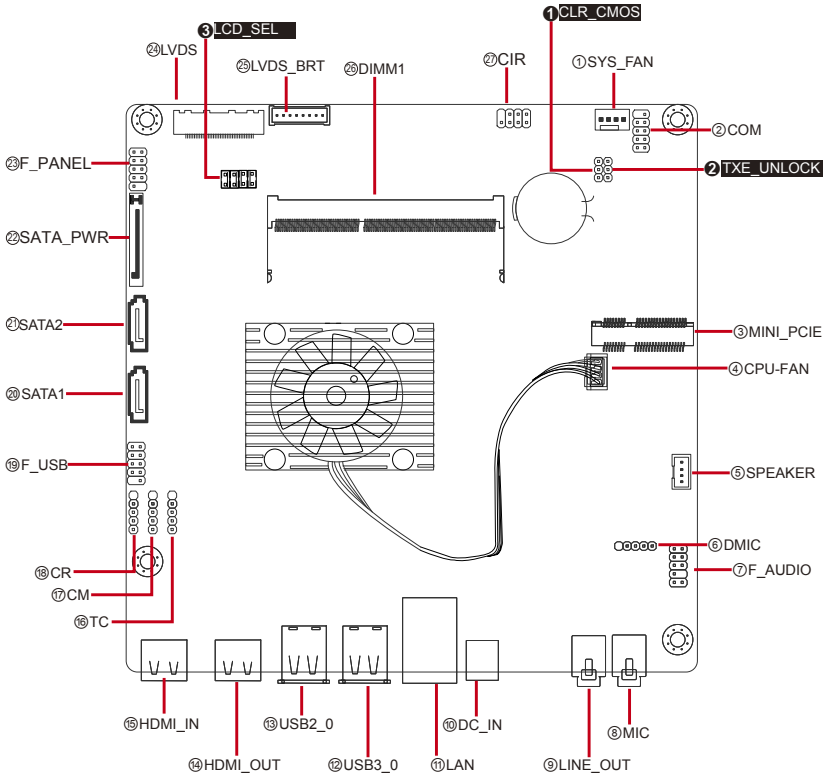

TC/CM/CR

Function: 5-pin USB 2.0 header

Connector Type: 2.54mm pitch 1x5-pin headers

Pin Assignment:

Pin	Desc.
1	+5V
2	USB-
3	USB+
4	GND
5	N/C

Board Top

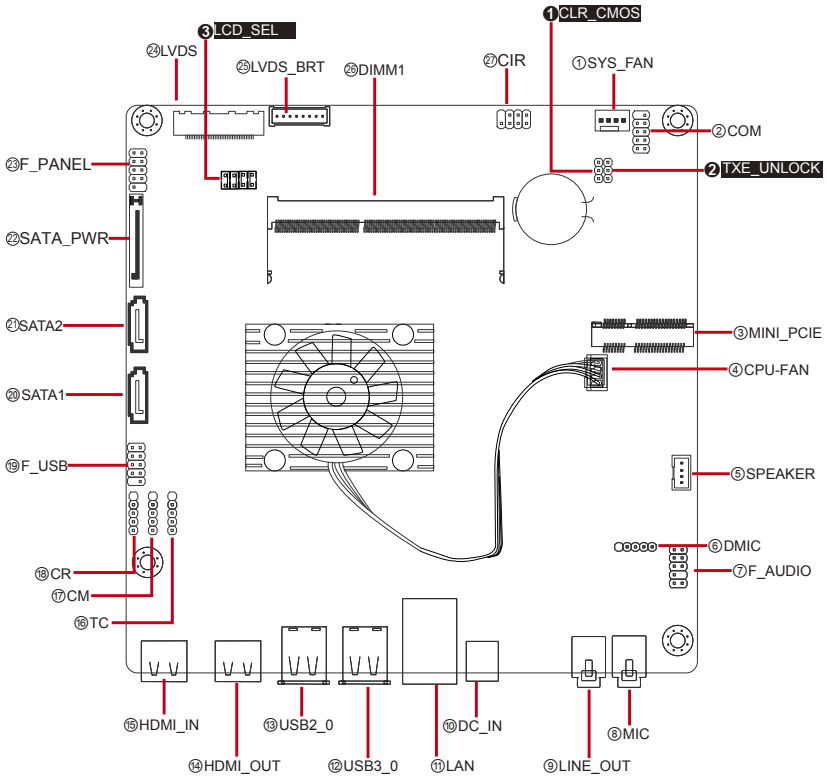

F_USB

Function: 10-pin USB 2.0 header supports card reader and camera or other USB 2.0 devices

Connector Type: 2.54mm pitch 2x5-pin headers

Pin Assignment:

Pin	Desc.	Pin	Desc.
1	+5V	2	+5V
3	USB Port A (-)	4	USB Port B (-)
5	USB Port A (+)	6	USB Port B (+)
7	GND	8	GND
9	N/C	10	N/C

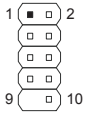

Board Top

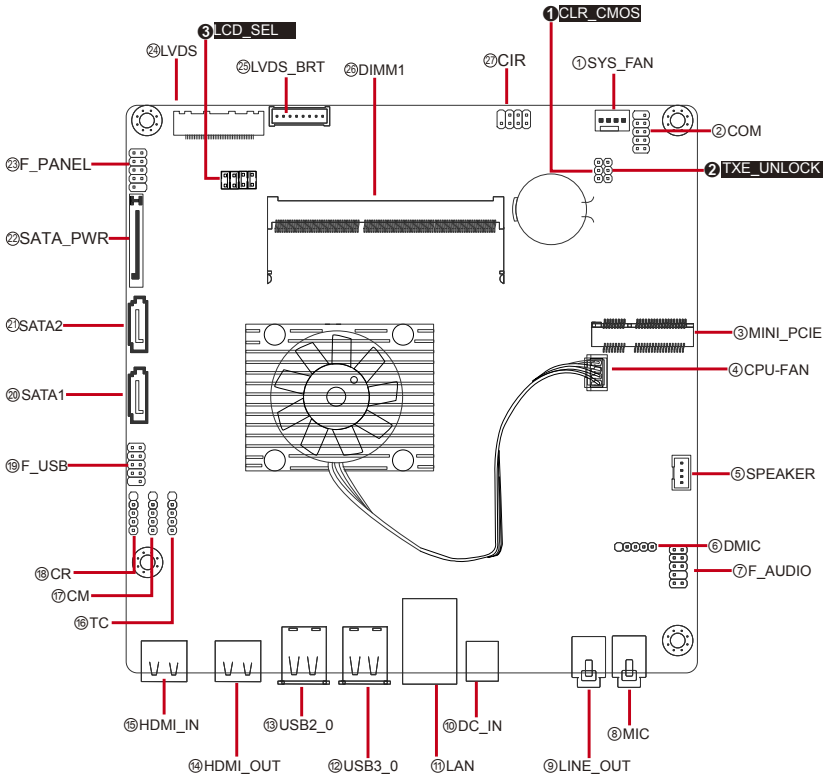

SATA1&2

Function:	Serial ATA Connectors	**Pin Assignment:**
Connector Type:	Lockable SATA connectors with housing	The pin assignments conform to the industry standard. 

Board Top

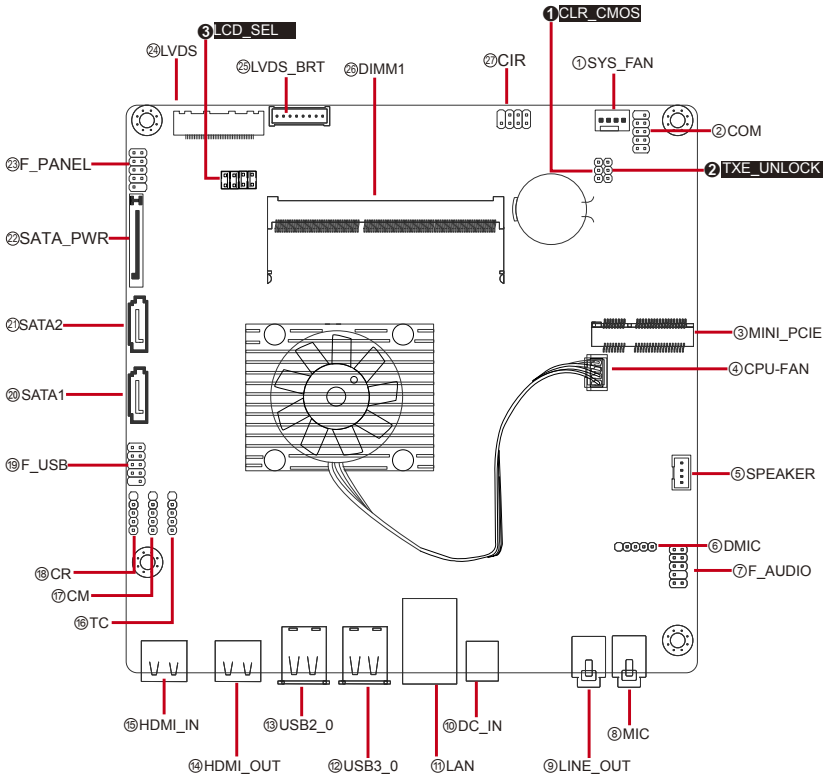

SATA_PWR

Function: Serial ATA Power Connector

Connector Type: SATA power connector

Pin Assignment:

The pin assignments conform to the industry standard.

Board Top

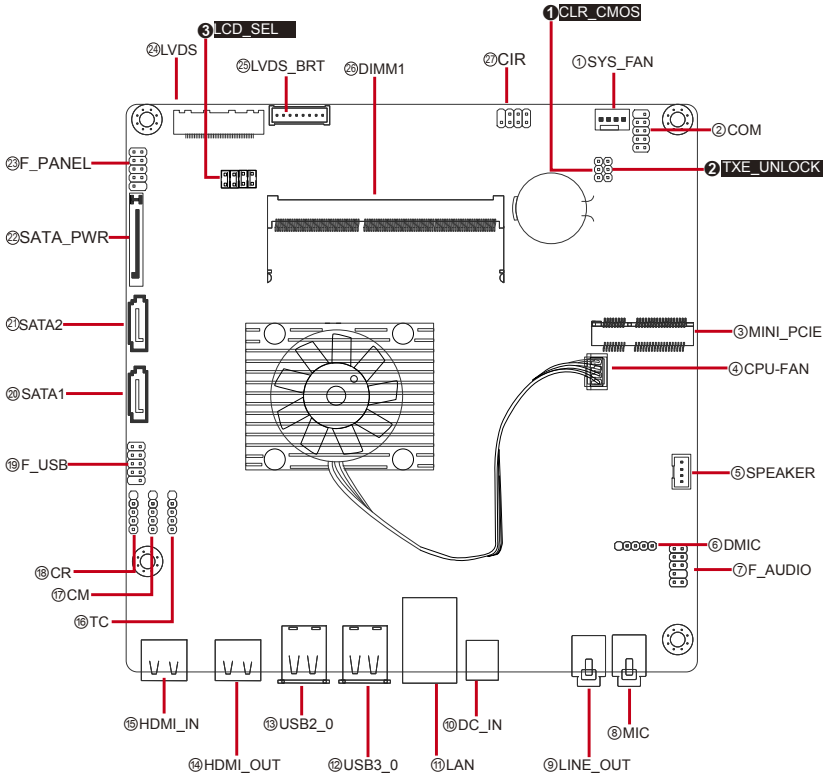

F_PANEL

Function: Front panel switch/LED header

Connector Type: 2.54mm pitch 2x5-pin headers

Pin Assignment:

Pin	Desc.	Pin	Desc.
1	HD LED(+)	2	MSG LED (+)
3	HD LED(-)	4	MSG LED (-)
5	Reset Switch (-)	6	Power Switch (+)
7	Reset Switch (+)	8	Power Switch (-)
9	Reserved	10	N/C

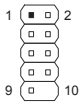

Board Top

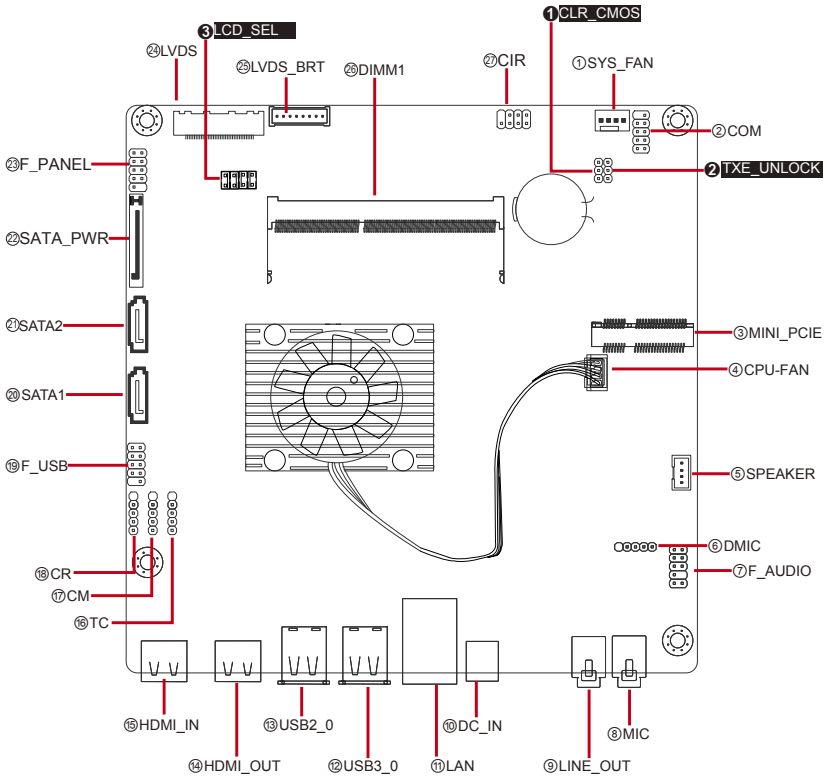

LVDS

Function: LVDS Connector (40-Pin)

Connector Type: 0.5mm pitch 40-pin coaxial connector

Pin Assignment:

Pin	Assignment	Pin	Assignment
1	ODD Lane3 +	21	NC
2	ODD Lane3 -	22	Power +3.3V
3	ODD Lane2 +	23	GND
4	ODD Lane2 -	24	GND
5	ODD Lane1 +	25	GND
6	ODD Lane1 -	26	ODD_Clock +
7	ODD Lane0 +	27	ODD_Clock -
8	ODD Lane0 -	28	GND
9	EVEN Lane3 +	29	GND
10	EVEN Lane3 -	30	GND
11	EVEN Lane2 +	31	EDID Clock
12	EVEN Lane2 -	32	LCD Backlight ON/OFF
13	EVEN Lane1 +	33	LCD Backlight adjustment
14	EVEN Lane1 -	34	EVEN Clock +
15	EVEN Lane0 +	35	EVEN Clock -
16	EVEN Lane0 -	36	LCD Backlight power +19V
17	GND	37	LCD Backlight power +19V
18	Power +5V	38	LCD Backlight power +19V
19	Power +5V	39	NC
20	Power +5V	40	EDID Data

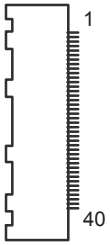

LVDS_BRT

Function: Display brightness header

Connector Type: 2.00mm pitch 1x8-pin box headers

Pin Assignment:

Pin	Desc.
1	LCD BKL ON/OFF
2	LCD BKL adjustment
3	LCD BKL Power +19V
4	LCD BKL Power +19V
5	GND
6	GND
7	LCD BKL Increase
8	LCD BKL decrease
9	N/C

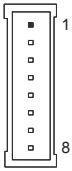

Board Top

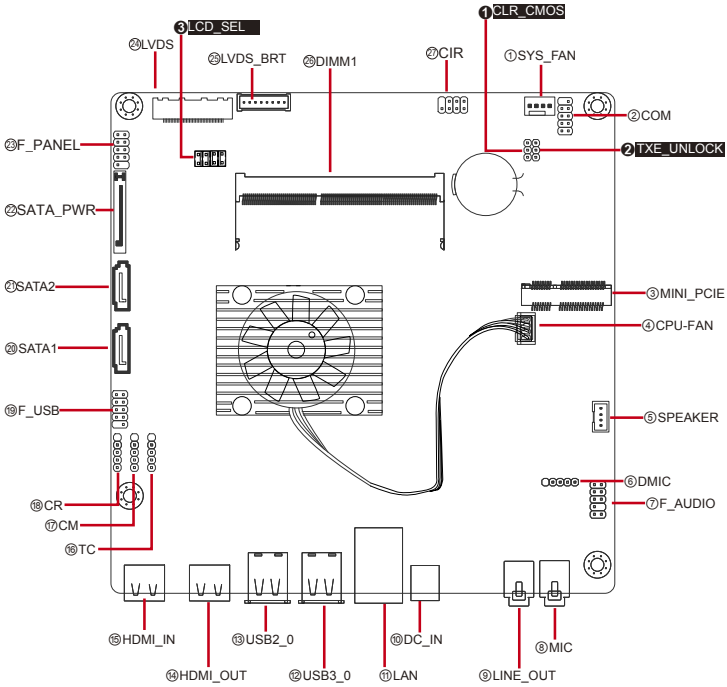

DIMM1

Function: SO-DIMM connectors

Connector Type: SO-DIMM connectors

Pin Assignment:

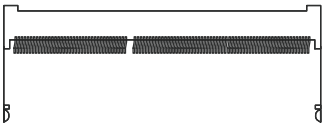

The pin assignments conform to the industry standard.

Board Top

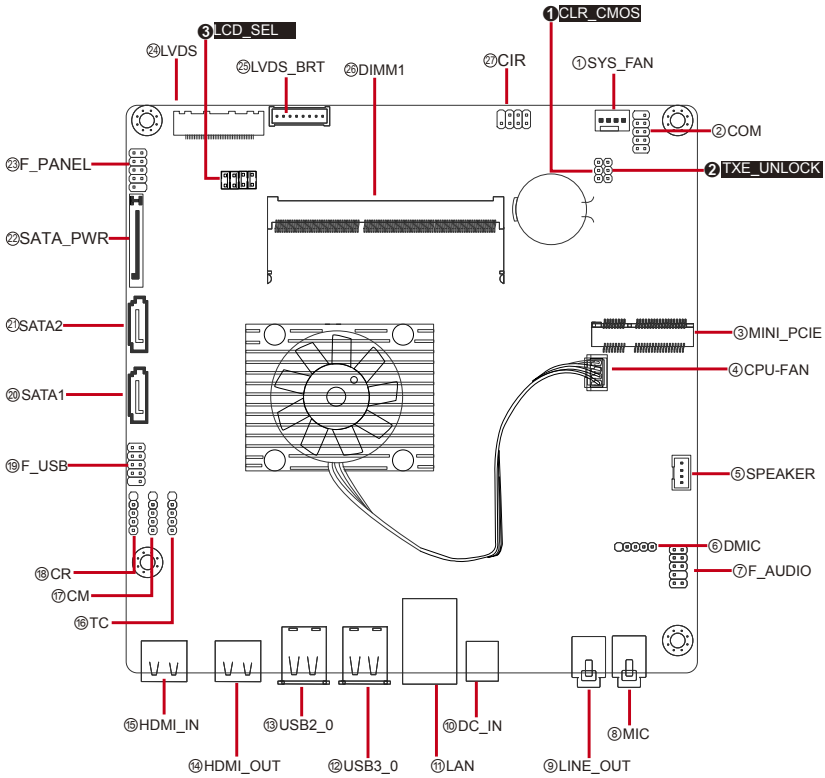

CIR

Function: Consumer Infrared Header

Connector Type: 2.54mm pitch 2x4-pin headers

Pin Assignment:

Pin	Desc.	Pin	Desc.
1	GND	2	N/C
3	N/C	4	N/C
5	PWR +5V	6	PWR +5V
7	CIR RX	8	N/C

Board Top

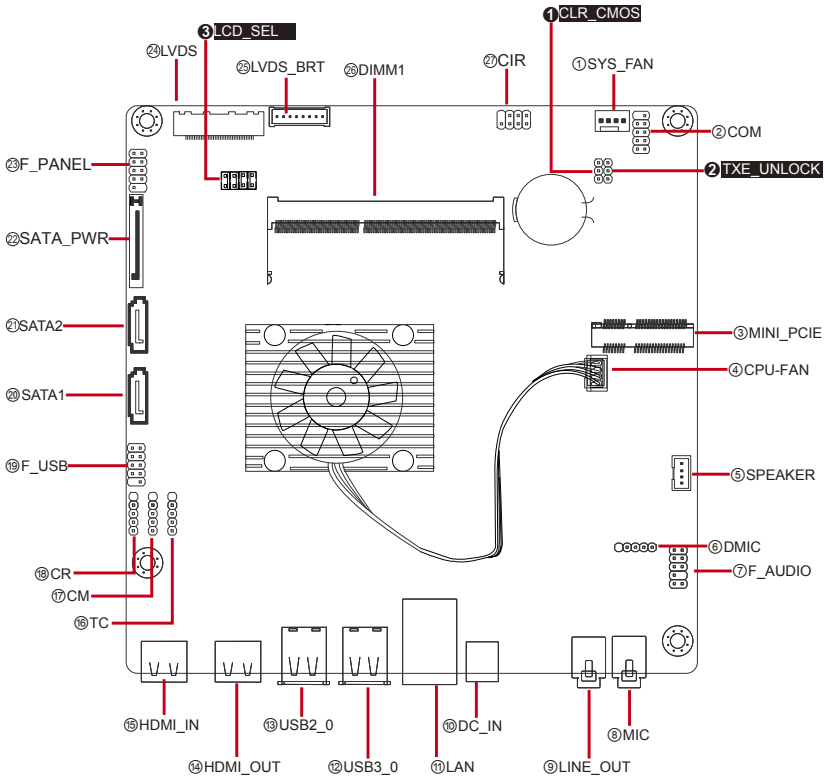

2.4. Driver Installation Notes

The board supports Windows 7 and Windows 8. Find the necessary drivers on the CD that comes with your purchase. For different OS, the driver/utility installation may vary slightly, but generally they are similar. Find the drivers on CD by the following paths:

Windows 8 & 8.1

Driver	Path
CHIPSET	\Chipset\SetupChipset_10.0.13_PC
GRAPHIC	\Graphics\WIN8_32\15.33.22.3621
	\Graphics\WIN8_64\15.33.22.64.3621
ETHERNET	\Ethernet\Realtek\Win8_8.1\Install_Win8_8.1_8031_05222014
AUDIO	\Audio\32bit_Win7_Win8_Win81_R275
	\Audio\64bit_Win7_Win8_Win81_R275
TXE	\TXE\Installers
SERIAL IO	\Serial IO\SerialIO_Installer_Win8.1_64bit_WW23

Windows 7

Driver	Path
CHIPSET	\Chipset\SetupChipset_10.0.13_PC
GRAPHIC	\Graphics\WIN7_32\Intel_EMGD.WIN7_PC_Version_36_15_0_1073
	\Graphics\WIN7_64\Intel_EMGD.WIN7_PC_Version_37_15_0_1073
ETHERNET	\Ethernet\Realtek\Win7\Install_Win7_7085_05222014
AUDIO	\Audio\32bit_Win7_Win8_Win81_R275
	\Audio\64bit_Win7_Win8_Win81_R275
TXE	\TXE\Installers (For 64-bit Windows only)
USB3.0	\USB3.0\Intel(R) USB 3.0 eXtensible Host Controller_ Win7_32bit_64bit_R3.0.0.33
SERIAL IO	\Serial IO\Intel Processor IO Drivers_Win7_32bit_64bit_Gold_v2.0

This page is intentionally left blank.

Chapter 3

BIOS

The BIOS Setup utility is featured by AMI BIOS to configure the system settings stored in the system's BIOS ROM. AMI BIOS is activated once the computer powers on.

After entering the utility, use the left/right arrow keys to navigate between the top menus and use the down arrow key to access one.

Menu	Description
Main	See 3.1. Main on page 41.
Advanced	See 3.2. Advanced on page 42.
Chipset	See 3.3. Chipset on page 50.
Boot	See 3.6. Boot on page 41.
Security	See 3.5. Security on page 57.
Exit	See 3.7. Save & Exit on page 58.

NOTE: For system stability and performance, this BIOS utility is constantly improved. The screenshots demonstrated and descriptions hereinafter are for reference only and may not exactly meet what is presented onscreen.

3.1. Main

The **Main** menu displays some BIOS info and features the settings of **System Date** and **System Time**.

```
Aptio Setup Utility - Copyright (C) 2014 American Megatrends, Inc.
Main  Advanced  Chipset  Feature  Security  Boot  Save & Exit

BIOS Information                                   Choose the system default
                                                   language.
BIOS Version                :   ITX-i230D 07/04/2014
System Serial Number        :   00000000
Motherboard Serial Number   :   EZ2131S42100002
MAC Address                 :   C8-9C-DC-F3-0B-3C

System Language                 [English]

System Date                     [Sat 09/15/2012]
System Time                     [14:04:38]                 →←: Select Screen
                                                           ↑↓: Select Item
                                                           Enter: Select
                                                           +/-: Change Opt.
                                                           F1: General Help
                                                           F2: Previous Values
                                                           F9: Optimized Defaults
                                                           F10: Save & Exit
                                                           ESC: Exit

Version 2.15.1242. Copyright (C) 2014 American Megatrends, Inc.
```

The BIOS info displayed is:

Info Item	Description
BIOS Version	Delivers the version of the BIOS.
System Serial Number	Delivers the System Serial Number.
Motherboard Serial Number	Delivers the Motherboard Serial Number.
MAC Address	Delivers the board's MAC Address.

The featured settings are:

Setting	Description
System Language	Sets system Language.
System Time	Sets system time.
System Date	Sets system date.

3.2. Advanced

The **Advanced** menu controls the system's CPU, IDE, Super IO, SATA and USB. It also helps users monitor hardware health.

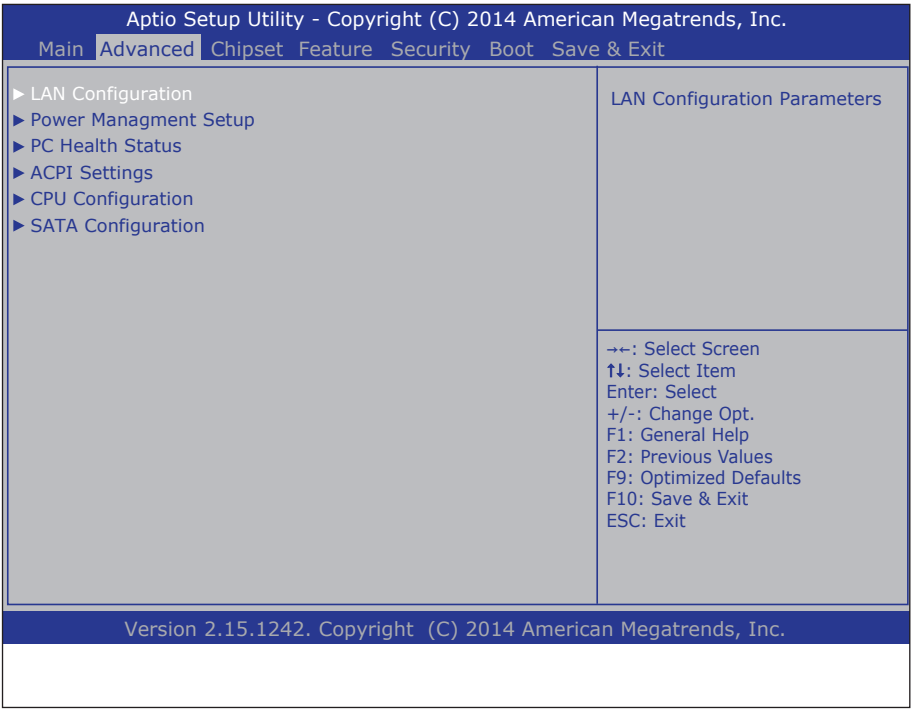

The featured submenus are:

Submenu	Description
LAN Configuration	See 3.2.1. LAN Configuration on page 43.
Power Management Setup	See 3.2.2. Power Management Setup page 44.
PC Health Status	See 3.2.3. PC Health Status on page 45.
ACPI Settings	See 3.2.5. CPU Configuration on page 47.
CPU Configuration	See 3.2.5. CPU Configuration on page 47.
SATA Configuration	See 3.2.6. SATA Configuration on page 49.

3.2.1. LAN Configuration

Access this submenu to configure the LAN-related information that the BIOS automatically detects.

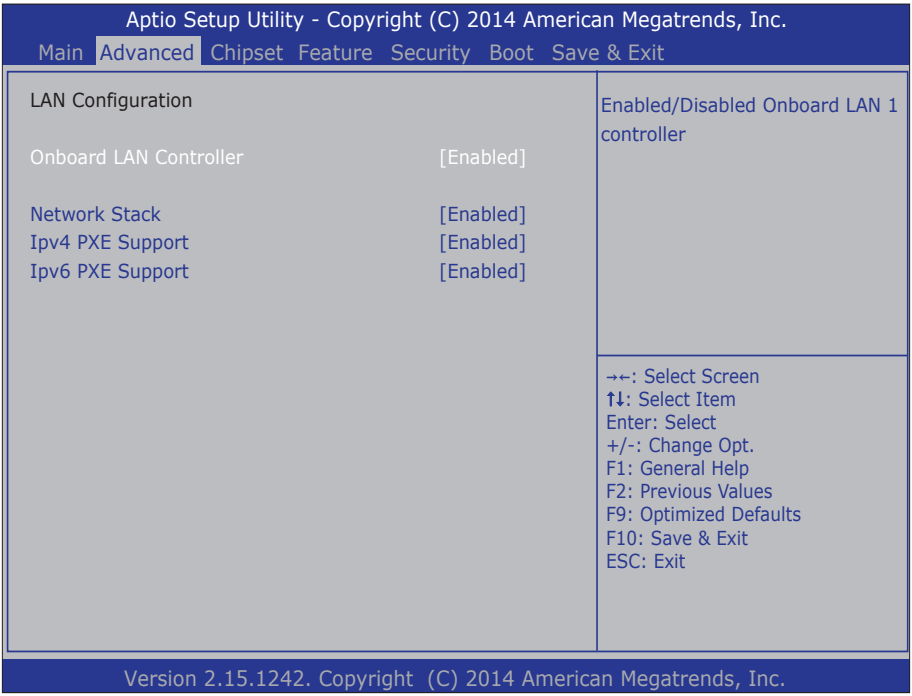

The featured submenus are:

Setting	Description
Onboard LAN Controller	Enables/disables Onboard LAN 1 controller. ▸ **Enabled** is the default.
Network Stack	Enables/disables UEFI network stack. ▸ **Enabled** is the default.
Ipv4/6 PXE Support*	Enables/disables Ipv4/6 PXE Boot Support. ▸ **Enabled** is the default. *These two items will be hidden when Network Stack is set to be disabled.

3.2.2. Power Management Setup

Access this submenu to setup some parameters for system power management operation.

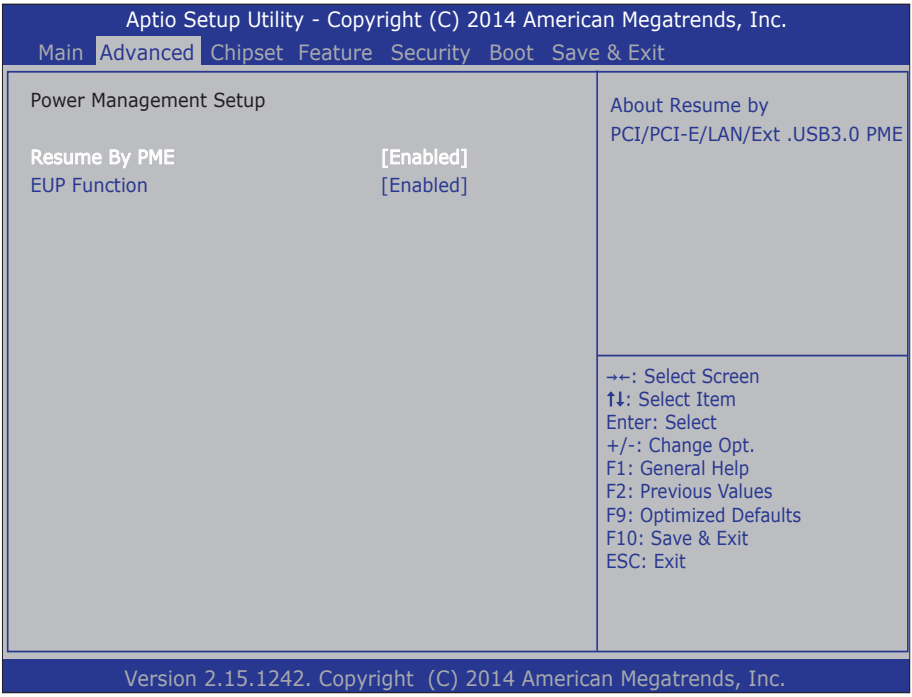

The featured submenus are:

Setting	Description
Resume By PME	Enables/disables Resume By PME. Sets whether the system will be awakened from power saving modes when activity or input signal of the specified hardware peripheral or components is detected. ▸ **Disabled** is the default.
EUP Function	Enables/disables **EUP Function**. ▸ **Enabled** is the default.

3.2.3. PC Health Status

Access this submenu to monitor of the overall inboard hardware health events, such as System temperature, CPU & DIMM voltage, CPU & System fan speed... etc.

Aptio Setup Utility - Copyright (C) 2014 American Megatrends, Inc.

Main | Advanced | Chipset | Feature | Security | Boot | Save & Exit

PC Health Status

CPU Temperature	42° C
System Temperature	40° C
CPU Fan Speed	1630 RPM
System Fan Speed	1377 RPM
CPU Voltage	0.816V
DIMM Voltage	1.356V
+12V	12.168V

→←: Select Screen
↑↓: Select Item
Enter: Select
+/-: Change Opt.
F1: General Help
F2: Previous Values
F9: Optimized Defaults
F10: Save & Exit
ESC: Exit

Version 2.15.1242. Copyright (C) 2014 American Megatrends, Inc.

3.2.4. ACPI Settings

Access this submenu to configure the highest ACPI sleep state when the system enters suspend.

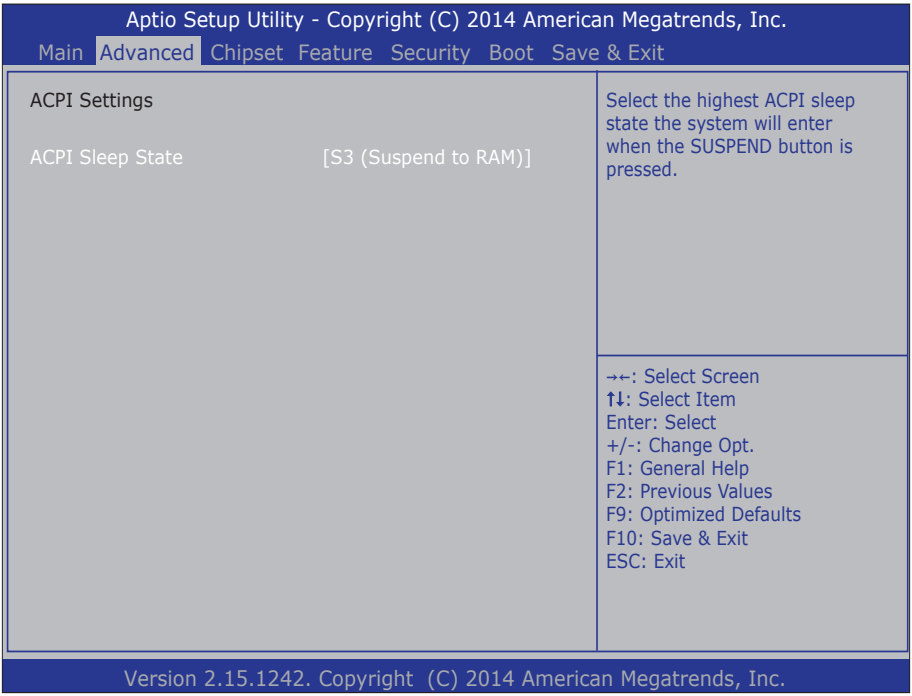

The featured submenus are:

Setting	Description
ACPI Sleep State	Sets the highest ACPI sleep state that system enters when the suspend button is hit. Options available are: ▸ **Suspend Disabled** ▸ **S3** only **(Suspend to RAM)** (default)

3.2.5. CPU Configuration

Access this submenu to setup the CPU Configuration.

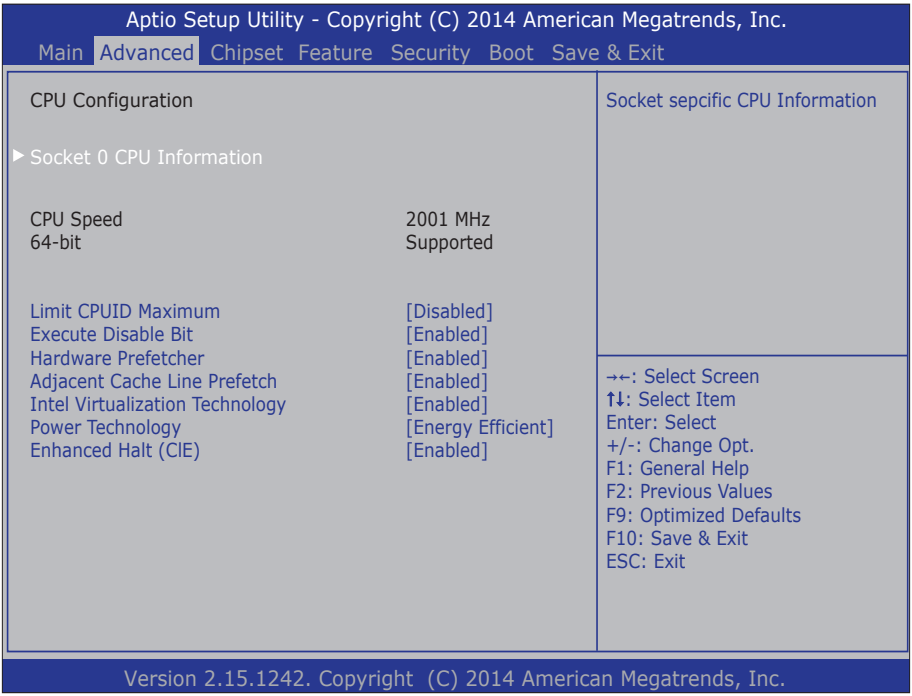

The featured submenus are:

Setting	Description
Socket 0 CPU Information	Enter the submenu to view the socket specific CPU info
Limit CPUID Maximum	Enables/disables the maximum CPUID value limit. Enable this item to prevent the system from “rebooting” when trying to install Windows XP. ▸ **Disabled** is the default.

Excute Disable Bit	Enables/disables the Excute Disable Bit. It allows the processor to classify areas in memory by where application code can execute and where it cannot. When a malicious worm attempts to insert code in the buffer, the processor disables code execution, preventing damage or worm propagation. Replacing older computers with Execute Disable Bit enabled systems can halt worm attacks, reducing the need for virus related repair. ▸ **Enabled** is the default.
Hardware Prefetcher	Enables/disables the Hardware Prefetcher. ▸ **Enabled** is the default.
Adjacent Cache Line Prefetch	Enables/disables the adjacent cache line prefetch. ▸ **Enabled** is the default.
Intel Virtualization Technology	Enables/disables the Intel Virtualization Technology. When enabled, a VMM can utilize the additional hardware capabilities provided by Vandor Pool Technology. ▸ **Enabled** is the default.
Power Technology	Sets the Energy mode of the processor. Options available are: ▸ **Disabled** ▸ **Energy Efficient** (default) ▸ **Custom**
Enhanced Halt (CIE)	Enables/disables the CPU energy-saving function when the system is not running. ▸ **Enabled** is the default.

3.2.6. SATA Configuration

Access this submenu to view SATA device(s) information and also to configure SATA device(s).

```
Aptio Setup Utility - Copyright (C) 2014 American Megatrends, Inc.
Main  Advanced  Chipset  Feature  Security  Boot  Save & Exit

SATA Configuration                                  Select IDE / AHCI

SATA Mode                          [AHCI Mode]

SATA Port1                         Not Present
SATA Port2                         Not Present

                                                    →←: Select Screen
                                                    ↑↓: Select Item
                                                    Enter: Select
                                                    +/-: Change Opt.
                                                    F1: General Help
                                                    F2: Previous Values
                                                    F9: Optimized Defaults
                                                    F10: Save & Exit
                                                    ESC: Exit

Version 2.15.1242. Copyright (C) 2014 American Megatrends, Inc.
```

The featured settings are:

Setting	Description
SATA Mode Selection	Sets the SATA mode. ▸ Options available are **Disabled**, **IDE Mode** ,and **AHCI** Mode(default).

3.3. Chipset

Access this **Chipset** menu to configure the system's chipset.

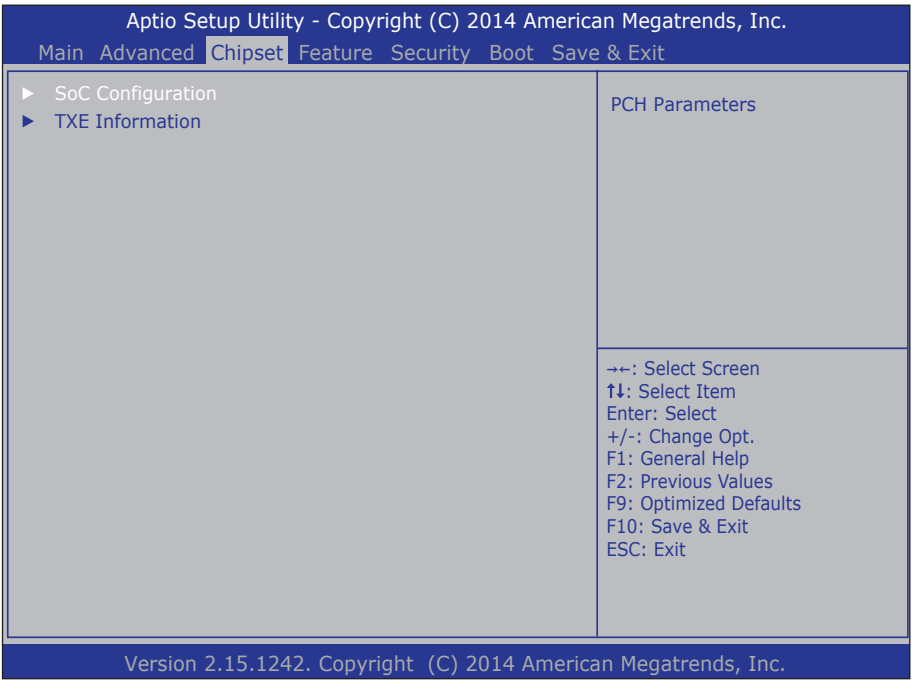

The featured submenu are **SoC Configuration** and **TXE Information**, which are covered in the following sections:

Submenu	Description
SoC Configuration	Configures the SoC. ▸ See 3.3.1. SoC Configuration on page 51 for more details.
TXE Information	Delivery TXE Configuration. ▸ See 3.3.2. TXE Information on page 52 for more details.

3.3.1. SoC Configuration

Access this submenu to configure SoC parameters.

```
Aptio Setup Utility - Copyright (C) 2014 American Megatrends, Inc.
Main  Advanced  Chipset  Feature  Security  Boot  Save & Exit

SoC Configuration                                  Select DVMT 5.0 Pre-Allocated
                                                   (Fixed) Graphics Memory size
DVMT Pre-Allocated              [32M]              used by the Internal Graphics
DVMT Total Gfx Mem              [256M]             Device.

Restore AC Power Loss           [Power Off]

Audio Configuration
Azalia HD Audio                 [Enabled]
Azalia Internal HDMI Codec      [Enabled]          →←: Select Screen
                                                   ↑↓: Select Item
                                                   Enter: Select
                                                   +/-: Change Opt.
                                                   F1: General Help
                                                   F2: Previous Values
                                                   F9: Optimized Defaults
                                                   F10: Save & Exit
                                                   ESC: Exit

Version 2.15.1242. Copyright (C) 2014 American Megatrends, Inc.
```

The featured settings are:

Setting/Submenu	Description
DVMT Pre-Allocated	Sets the DVMT 5.0 Pre-Allocated (Fixed) Graphics Memory size used by the Internal Graphics Device. Options are: **32M (default), 64M, 128M, 256M, 512M**.
DVMT Total Gfx Mem	Sets the DVMT 5.0 and graphic memory size used by Internal Graphics Device. Options are: **128M, 256M (default), Max**.
Restore AC Power Loss	Enables/disables your computer to automatically restart or return to its operating status ▸ **Enabled** is the default.
Azalia HD Audio	Enables/disables Azalia HD Audio ▸ **Enabled** is the default.
Azalia Internal HDMI Codec	Enables/disables Azalia Internal HDMI Codec ▸ **Enabled** is the default.

3.3.2. TXE Information

Access this submenu to configure the system agent.

```
Aptio Setup Utility - Copyright (C) 2014 American Megatrends, Inc.
Main  Advanced  Chipset  Feature  Security  Boot  Save & Exit

TXE Information

Sec RC Version 00.05.00.00
TXE FW Version 01.00.02.1060

→←: Select Screen
↑↓: Select Item
Enter: Select
+/-: Change Opt.
F1: General Help
F2: Previous Values
F9: Optimized Defaults
F10: Save & Exit
ESC: Exit

Version 2.15.1242. Copyright (C) 2014 American Megatrends, Inc.
```

The featured settings are:

Setting	Description
Sec RC Version	Display the Sec Reference Code Version
TXE FW Version	Display the TXE Firmware Version

3.4. Feature

The **Feature** menu sets up the Intel Advance Feature.

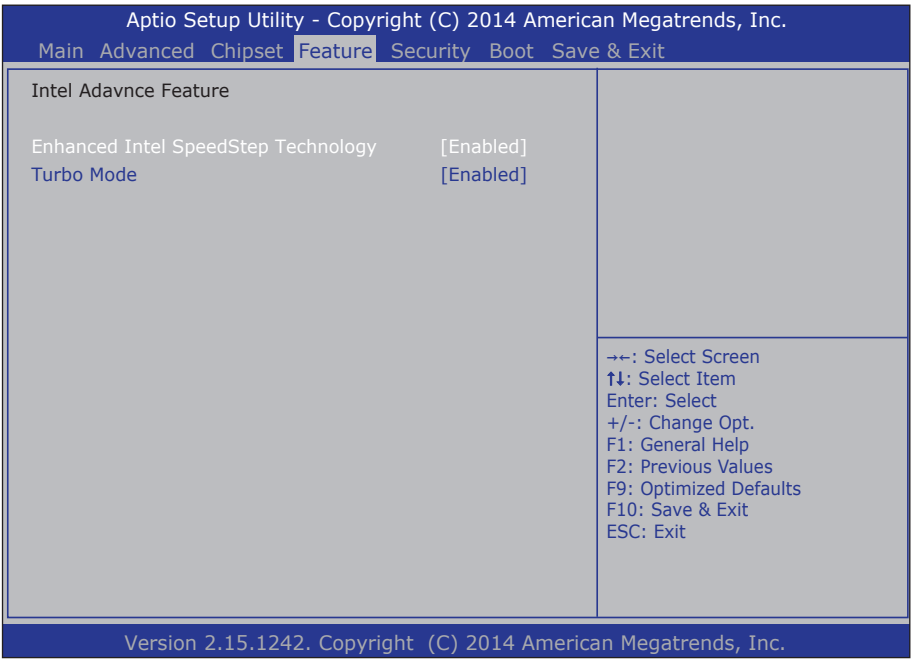

The featured settings are:

Setting	Description
Enhanced Intel SpeedStep Technology	Enables/disables the EIST (Enhanced Intel SpeedStep Technology) ▸ **Enabled** is the default.
Turbo Mode	Enables/disables the CPU Turbo Mode ▸ **Enabled** is the default.

3.5. Security

The **Security** menu sets up the administrator password. Once an administrator password is set up, this BIOS Setup utility is limited to access and will ask for the password each time any access is attempted.

```
Aptio Setup Utility - Copyright (C) 2014 American Megatrends, Inc.
Main  Advanced  Chipset  Feature  Security  Boot  Save & Exit

Administrator Password Staus        Not Installed
User Password Staus                 Not Installed

Administrator Password

▶ Secure Boot menu

                                    →←: Select Screen
                                    ↑↓: Select Item
                                    Enter: Select
                                    +/-: Change Opt.
                                    F1: General Help
                                    F2: Previous Values
                                    F9: Optimized Defaults
                                    F10: Save & Exit
                                    ESC: Exit

Version 2.15.1242. Copyright (C) 2014 American Megatrends, Inc.
```

The featured settings are:

Setting	Description
Administrator Password	To set up an administrator password: 1. Select **Administrator Password**. A **Create New Password** dialog then pops up onscreen. 2. Enter your desired password that is no less than 3 characters and no more than 20 characters. 3. Hit [Enter] key to submit.
Secure boot Menu	See 3.5.1 Secure Boot menu on page 55

3.5.1 Secure Boot menu

The submenu sets up the Customizable Secure Boot settings.

The featured settings are:

Setting	Description
System Mode	Display the system of secure boot
Secure Boot	Display the active state of secure boot
Secure Boot Mode	Sets the secure boot mode, when you select standard mode, secure boot policy is fixed; when you select custom mode, the image execution policy and secure boot key databases are changeable. ▸ **Enabled** is the default.
Key Management	See 3.5.1.1 Key Management on the page 55

3.5.1.1 Key Management

The submenu sets up the Key Management.

The featured settings are:

Setting	Description
Factory Default Key Provisioning	Install default secure boot keys when system is in setup mode. ▸ **Enabled** is the default.
Install All Factory Default Keys	Press this to force system to user mode--install all factory default keys (PK, KEK, DB, DBX). And the change takes effect after reboot.
Save All Secure Boot Variables	Press this to store content of each secure boot variable (data formatted as EFI_SIGNATURE_LIST) to a file with matching name on selected file system's root folder.
Platform Key (PK)	Display the information of the platform key.
Delete PK/KEK/DB/DBX	Press to delete the variable.
Set new PK/KEK/DB/DBX	Press to launch the file browser to set Efi Variable from the file. The file data must be formatted as Efi Variable with TimeBased Authenticated Header.
Key Exchange Key	Display the Key Exchange key (KEK)/Authorized Signatures/ Forbidden Signature installed or not.
Append Var to KEK/DB/ DBX	Press to launch the file browser to set Efi Variable from the file. The file data must be formatted as Efi Variable with TimeBased Authenticated Header.

3.6. Boot

Access this menu to change system boot settings.

```
Aptio Setup Utility - Copyright (C) 2014 American Megatrends, Inc.
Main  Advanced  Chipset  Feature  Security  Boot  Save & Exit

Boot Configuration                                  Windows 7 or other OS: Boot
                                                    Policy for Legacy OS
Operation System Select          [Windows 8.x]
                                                    Windows 8.x: Boot policy for
Fast Boot                        [Enabled]          UEFI OS Without Compatibility
 VGA Support                     [EFI Driver]       Support Module (CSM)
 USB Support                     [Partial Initial]
 Network Stack Driver Support    [Disabled]         Windows 8.x with CSM: Boot
                                                    policy for Windows 8.x with
Launch CSM                       [Disabled]         Compatibility Support Module
                                                    (CSM)
Bootup Numlock State             [On]
                                                    →←: Select Screen
Set Boot Priority                                   ↑↓: Select Item
Boot Option #1                   [USB Flash]        Enter: Select
Boot Option #2                   [CD/DVD]           +/-: Change Opt.
Boot Option #3                   [Hard Disk: Windows...]  F1: General Help
Boot Option #4                   [USB CD/DVD]       F2: Previous Values
Boot Option #5                   [USB Hard Disk]    F9: Optimized Defaults
Boot Option #6                   [Network]          F10: Save & Exit
                                                    ESC: Exit

Version 2.15.1242. Copyright (C) 2014 American Megatrends, Inc.
```

The featured submenu is:

Setting	Description
Operation System Select	Sets Operation system type. Options are: ▸ **Windows 7 or other OS**: Boot Policy for Legacy OS ▸ **Windows 8.x**: Boot policy for UEFI OS Without Compatibility Support Module (CSM) ▸ **Windows 8.x with CSM**: Boot policy for Windows 8.x with Compatibility Support Module(CSM)
Fast Boot	Enables/disables initializing only a minimal set of devices required to launch the active boot options when booting up the system. ▸ **Disabled** is the default. ▸ This setting has no effect for BBS (BIOS Boot Specification) options. ▸ Options available are: **Enabled/Disabled**.

VGA Support	Sets VGA support option. If auto, only install legacy OpROM with legacy OS and Post logo will not be shown during post. EFI driver still be installed with EFI OS. ▸ Options available are **EFI Driver** (default) and **Auto**.
USB Support	Sets USB support option. Options are: **Disabled**: all USB devices will not be available until after OS boot. **Partial Initial**: specific USB port/device will not be available before OS boot. **Full Initial**: all USB devices will be available in OS and POST.
Network Stack Driver Support	Enables/disables the Network Stack Driver Support. ▸ **Disabled** is the default.
Bootup NumLock State	Sets whether to enable or disable the keyboard's NumLock state when the system starts up. ▸ Options available are **On** (default) and **Off**.
Set Boot Priority	Sets boot priority for all boot devices.
Boot Option #1 /2 /3 /4 /5 /6	Sets boot priority for all boot devices. Options are: **USB Flash, CD/DVD, Hard Disk: Windows..., USB CD/DVD, USB Hard Disk, Network**

3.7. Save & Exit

The **Exit** menu features a handful of commands to launch actions from the BIOS Setup utility regarding saving changes, quitting the utility and recovering defaults.

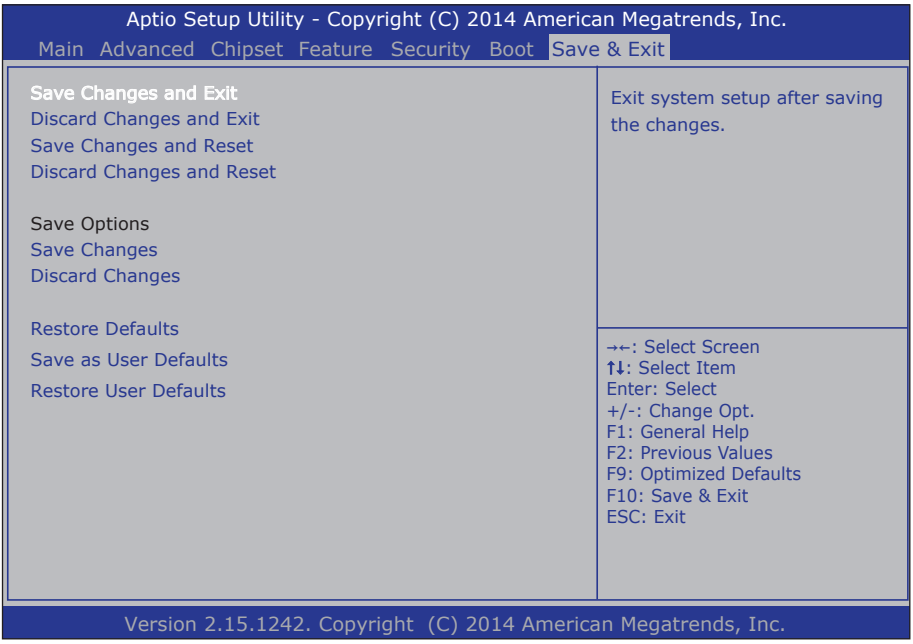

The featured settings are:

Setting	Description
Save Changes and Exit	Saves the changes and quits the BIOS Setup utility. ▶ This is a command to launch an action from the BIOS Setup utility. ▶ When prompted for confirmation, select **OK** to save the changes and quit the BIOS Setup, or select **Cancel** to return to BIOS Setup.
Discard Changes and Exit	Discards the changes and quits the BIOS Setup utility. ▶ This is a command to launch an action from the BIOS Setup utility. ▶ When prompted for confirmation, select **OK** to quit BIOS Setup without saving the change(s), or select **Cancel** to return to the BIOS setup.
Save Changes and Reset	Reset system setup after saving the changes. ▶ This is a command to launch an action from the BIOS Setup utility. ▶ When prompted for confirmation, select **OK** to save the changes and quit the BIOS Setup, or select **Cancel** to return to BIOS Setup.
Save Changes	Save the changes that you have made.
Discard Changes	Discard any changes that you have made.

Restore Defaults	Loads the defaults to all settings. ▶ This is a command to launch an action from the BIOS Setup utility. ▶ When prompted for confirmation, select **OK** to load the defaults, or select **Cancel** to return to the BIOS setup.
Save as User Defaults	Save the changes that you have made as user defaults.
Restore User Defaults	Restore the user defaults.

This page is intentionally left blank.

Appendices

Appendix A. I/O Port Address Map

Each peripheral device in the system is assigned a set of I/O port addresses which also becomes the identity of the device.
The following table lists the I/O port addresses used.

Address	Device Description
0x0000F080-0x0000F087	Microsoft Basic Display Adapter
0x000003B0-0x000003BB	Microsoft Basic Display Adapter
0x000003C0-0x000003DF	Microsoft Basic Display Adapter
0x00000A00-0x00000A1F	Motherboard resources
0x00000A20-0x00000A2F	Motherboard resources
0x00000A30-0x00000A3F	Motherboard resources
0x0000002E-0x0000002F	Motherboard resources
0x0000004E-0x0000004F	Motherboard resources
0x00000061-0x00000061	Motherboard resources
0x00000063-0x00000063	Motherboard resources
0x00000065-0x00000065	Motherboard resources
0x00000067-0x00000067	Motherboard resources
0x00000070-0x00000070	Motherboard resources
0x00000080-0x0000008F	Motherboard resources
0x00000092-0x00000092	Motherboard resources
0x000000B2-0x000000B3	Motherboard resources
0x00000680-0x0000069F	Motherboard resources
0x00000400-0x0000047F	Motherboard resources
0x00000500-0x000005FE	Motherboard resources
0x00000600-0x0000061F	Motherboard resources
0x00000000-0x0000006F	PCI Express Root Complex
0x00000078-0x00000CF7	PCI Express Root Complex
0x00000D00-0x0000FFFF	PCI Express Root Complex
0x0000E000-0x0000E0FF	PCI standard PCI-to-PCI bridge
0x00000020-0x00000021	Programmable interrupt controller
0x00000024-0x00000025	Programmable interrupt controller
0x00000028-0x00000029	Programmable interrupt controller

Address	Device Description
0x0000002C-0x0000002D	Programmable interrupt controller
0x00000030-0x00000031	Programmable interrupt controller
0x00000034-0x00000035	Programmable interrupt controller
0x00000038-0x00000039	Programmable interrupt controller
0x0000003C-0x0000003D	Programmable interrupt controller
0x000000A0-0x000000A1	Programmable interrupt controller
0x000000A4-0x000000A5	Programmable interrupt controller
0x000000A8-0x000000A9	Programmable interrupt controller
0x000000AC-0x000000AD	Programmable interrupt controller
0x000000B0-0x000000B1	Programmable interrupt controller
0x000000B4-0x000000B5	Programmable interrupt controller
0x000000B8-0x000000B9	Programmable interrupt controller
0x000000BC-0x000000BD	Programmable interrupt controller
0x000004D0-0x000004D1	Programmable interrupt controller
0x0000E000-0x0000E0FF	Realtek PCIe GBE Family Controller
0x0000F000-0x0000F01F	SM Bus Controller
0x0000F070-0x0000F077	Standard SATA AHCI Controller
0x0000F060-0x0000F063	Standard SATA AHCI Controller
0x0000F050-0x0000F057	Standard SATA AHCI Controller
0x0000F040-0x0000F043	Standard SATA AHCI Controller
0x0000F020-0x0000F03F	Standard SATA AHCI Controller
0x00000070-0x00000070	System CMOS/real time clock
0x00000040-0x00000043	System timer
0x00000050-0x00000053	System timer

Appendix B. Interrupt Request Lines (IRQ)

Peripheral devices use interrupt request lines to notify CPU for the service required. The following table shows the IRQ used by the devices on board.

Level	Function
IRQ0	System timer
IRQ4	SM Bus Controller
IRQ8	High Precision Event Timer
IRQ16	PCI standard PCI-to-PCI bridge
IRQ18	Realtek PCIe GBE Family Controller
IRQ18	PCI standard PCI-to-PCI bridge
IRQ19	Standard SATA AHCI Controller
IRQ19	PCI standard PCI-to-PCI bridge
IRQ22	High Definition Audio Controller
IRQ81~IRQ511	Microsoft ACPI-Compliant System
IRQ4294967294	Intel(R) USB 3.0 eXtensible Host Controller - 0100 (Microsoft)

Appendix C. BIOS Memory Map

Address	Device Description
0xD0716000-0xD07167FF	Standard SATA AHCI Controller
0xE0000000-0xEFFFFFFF	Motherboard resources
0xFED01000-0xFED01FFF	Motherboard resources
0xFED03000-0xFED03FFF	Motherboard resources
0xFED04000-0xFED04FFF	Motherboard resources
0xFED0C000-0xFED0FFFF	Motherboard resources
0xFED08000-0xFED08FFF	Motherboard resources
0xFED1C000-0xFED1CFFF	Motherboard resources
0xFEE00000-0xFEEFFFFF	Motherboard resources
0xFEF00000-0xFEFFFFFF	Motherboard resources
0xD0000000-0xD03FFFFF	Microsoft Basic Display Adapter
0xC0000000-0xCFFFFFFF	Microsoft Basic Display Adapter
0xA0000-0xBFFFF	Microsoft Basic Display Adapter
0xA0000-0xBFFFF	PCI Express Root Complex
0xFED00000-0xFED003FF	High Precision Event Timer
0xFF000000-0xFFFFFFFF	Intel(R) 82802 Firmware Hub Device
0xC0000-0xDFFFF	PCI Express Root Complex
0xE0000-0xFFFFF	PCI Express Root Complex
0x80000000-0xD0716FFF	PCI Express Root Complex
0xD0700000-0xD070FFFF	Intel(R) USB 3.0 eXtensible Host Controller - 0100 (Microsoft)
0xD0500000-0xD05FFFFF	PCI Encryption/Decryption Controller
0xD0400000-0xD04FFFFF	PCI Encryption/Decryption Controller
0xD0710000-0xD0713FFF	High Definition Audio Controller
0xD0604000-0xD0604FFF	Realtek PCIe GBE Family Controller
0xD0600000-0xD0603FFF	Realtek PCIe GBE Family Controller
0xD0600000-0xD0603FFF	PCI standard PCI-to-PCI bridge
0xD0714000-0xD071401F	SM Bus Controller